# ADJOINING SITE RESPONSE ACTIVITY REPORT

© 2017 SME

MICHIGAN DEPARTMENT OF ENVIRONMENTAL QUALITY - REMEDIATION AND REDEVELOPMENT DIVISION
PO BOX 30426, LANSING, MICHIGAN 48909-7926, Phone 517-373-9837, Fax 517-373-2637

# Request for Certificate of Completion from DEQ

*This form is required for submittal of a request for the DEQ to issue a Certificate of Completion of a response activity under Section 20114f, Part 201, Environmental Remediation, of the Natural Resources and Environmental Protection Act, 1994 PA 451, as amended.*

## Section A - Type of Response Activity Completed:

| | | | |
|---|---|---|---|
| Remedial Investigation (RI) | ☐ | Remedial Action | ☐ |
| Evaluation other than RI | ☐ | Interim Response | ☐ |
| Feasibility Study | ☐ | Other, Specify: Offsite Migration | ☒ |

## Section B - Prior DEQ Approval of the Response Activity:

Did the response activity completed receive prior approval from the DEQ pursuant to Section 14b of Part 201?

No ☒
Yes ☐ If the answer is "yes", provide the date and title of the response activity plan approved.

## Section C - Facility Information:

Facility Name: Medical Center Court Apartments

Street Address of Property: 1005 Maiden Lane

City: Ann Arbor State: MI Zip:
Property Tax ID (include all applicable IDs): 09-09-21-302-040, 09-09-21-302-038, and 09-09-21-302-042

Status of submitter relative to the property (check all that apply):

| | Former | Current | Prospective |
|---|---|---|---|
| Owner | ☐ | ☒ | ☐ |
| Operator | ☐ | ☒ | ☐ |

County: Washtenaw
City/Village/Township: City of Ann Arbor

Town: 02S Range: 06E Section: 21
Quarter: SW Quarter-Quarter: SE

Decimal Degrees Latitude: 42.2898
Decimal Degrees Longitude: -83.7345

Reference point for latitude and longitude:
Center of site ☒ Main/front door ☐
Front gate/main entrance ☐ Other ☐

Collection method:
Survey ☐ GPS ☐ Interpolation ☒

## Section D: Facility/Property Regulated by (Check all that apply):

| | |
|---|---|
| Facility regulated under Part 201, other source, or source unknown | ☐ |
| Part 201 Site ID, if known: | |
| Leaking Underground Storage Tank regulated pursuant to Part 213 | ☐ |
| Part 211/213. Facility ID, if known: | |
| Oil or gas production and development regulated pursuant to Part 615 or 625 | ☐ |
| Licensed landfill regulated pursuant to Part 115 | ☐ |
| Licensed hazardous waste treatment, storage, or disposal facility regulated pursuant to Part 111 | ☐ |
| Consent Agreement or other legal agreement with the MDEQ | ☐ |

## Section E - Submitter Information:

Entity/person requesting the Certificate of Completion: McKinley Associates, Inc.

Contact Person (name and title): Nate Lewis, VP, Director of Real Estate Transaction Services (McKinley Associates, Inc.)
Submitter Address: 320 North Main Street
City: Ann Arbor State: Michigan Zip: 48104
Telephone: 734-769-8520 E-Mail: nlewis@mckinley.com
Relationship of contact person to the submitter: VP, Director of Real Estate Transaction Services

**Section F: Are/were the following present at the facility (Check all that apply):**

| | Current | Previous | Unknown |
|---|---|---|---|
| Free product/Non aqueous phase liquids (NAPL) | ☐ | ☐ | ☐ |
| Soil contamination above any residential criteria | ☐ | ☐ | ☐ |
| Soil contamination above any non-residential criteria | ☐ | ☐ | ☐ |
| Soil aesthetic impacts | ☐ | ☐ | ☐ |
| Groundwater contamination above any residential criteria | ☒ | ☐ | ☐ |
| Groundwater contamination above any non-residential criteria | ☒ | ☐ | ☐ |
| Groundwater contamination above the Acute Inhalation Screening Level | ☐ | ☐ | ☐ |
| Groundwater aesthetic impacts | ☐ | ☐ | ☐ |
| Soil Gas contamination above residential vapor intrusion (VI) screening levels | ☒ | ☐ | ☐ |
| Soil Gas contamination above non-residential screening levels | ☐ | ☐ | ☐ |
| Conditions immediately dangerous to life or health (IDLH) | ☐ | ☐ | ☐ |
| Fire & Explosion hazards related to releases | ☐ | ☐ | ☐ |
| Contamination existing in drinking water supply | ☐ | ☐ | ☐ |
| Imminent threat to drinking water supply | ☐ | ☐ | ☐ |
| Impact to surface water | ☐ | ☐ | ☐ |
| Impact to surface water sediments above screening levels | ☐ | ☐ | ☐ |

**Section G - The following questions assist MDEQ in evaluating the request for a Certificate of Completion: (Please note this information is not required if the Certificate of Completion is being requested for a response activity previously approved by the MDEQ (see Section B) and the responses below have not changed since the prior submittal.**

**Known or Suspected Contaminant(s) Type (Check all that apply):**

Petroleum ☐ Volatile Organic Compounds ☒ Metals ☐ Other ☐

**Current Site Status (Check all that apply):**

Undergoing property transfer ☐ Active operations ☒ Inactive operation ☐

**Current Property Use:**

Residential/Institutional (including schools, nursing homes, hospitals, etc.) ☒
Non-residential ☐

**Anticipated Property Use:**

Residential/Institutional (including schools, nursing homes, hospitals, etc.) ☒
Non-residential ☐

**Estimated Area of Contamination Addressed in Response Action Plan (Cumulative):**

Currently undetermined ☐ < 0.5 acre ☐ > 0.5 acre ☒

**Migration:**

| | Yes | No | Unknown |
|---|---|---|---|
| Has contamination migrated beyond the property boundaries? | ☐ | ☐ | ☒ |
| Has the Notice of Migration been submitted? | ☐ | ☒ | ☐ |

**Facility Investigation Status:**

Ongoing ☐ Complete ☒

**Facility Response Activity Status (Check all that apply):**

None ☐ IR Implemented ☐ Response Activity Ongoing ☐ Response Activity Completed ☒

**Drinking Water Supply for Facility (Check all that apply):**

Municipal ☒ Private Well(s) ☐ No Current Water Supply ☐ Municipal Available ☐

**On-site Well(s) (Check all that apply):**

Drinking Water ☐ Industrial/Commercial Production ☐ Agricultural/Irrigation ☐ No well on-site ☒
Approximate Depth of Well(s):

| **Local Drinking Water Supply:** |
|---|
| Is facility in a designated Wellhead Protection Area? Yes ☐ No ☒<br>Distance to nearest off-site drinking water well: 1,835 feet north Private/Commercial ☒ Municipal ☐ |
| **Surface Water Bodies on or Adjacent to Facility (Check all that apply):** |
| Wetlands ☐ Ditch ☐ Stream/River ☒ Lake/Pond ☐ |
| **Local Surface Water Bodies:** |
| Distance to nearest wetland: 0.5 miles east Ditch: >1 Mile Stream/River:750 feet east Lake/Pond: 2,500 feet north |

**Section H - Environmental Professional Signature:**

*With my signature below, I certify that the documentation of the completed response activity and all related materials are true, accurate, and complete to the best of my knowledge and belief.*

Signature: Date:

Printed Name: Jennifer Ritchie

Company of Environmental Professional: PM Environmental, Inc.

Address: 4080 Eleven Mile Road

City: Berkley State: Michigan Zip: 48072

Telephone: 248-414-1430 E-mail address: ritchie@pmenv.com

**Section I - Submitter Signature:**

*With my signature below, I certify that the documentation of the completed response activity and all related materials are true, accurate, and complete to the best of my knowledge and belief.*

Signature: Date:

Printed name: Nate Lewis

Title/Relationship of signatory to submitter: VP, Director of Real Estate Transaction Services (McKinley Associates, Inc.)
Address: 320 North Main Street

City: Ann Arbor State: Michigan Zip: 48104

Telephone: 734-769-8520 E-Mail address: nlewis@mckinley.com

This form and the documentation for the completed response activity should be submitted to the MDEQ Remediation & Redevelopment Division District Office for the county in which the property is located, unless the response activity was related to a facility that is regulated by another MDEQ Division. A district map is located at www.michigan.gov/deqrrd. If regulated by another division, contact should be made with that division for information on where to submit the form and documentation.

MICHIGAN DEPARTMENT OF ENVIRONMENTAL QUALITY - REMEDIATION AND REDEVELOPMENT DIVISION
PO BOX 30426, LANSING, MICHIGAN 48909-7926, Phone 517-284-5087, Fax 517-241-9581

# Request for DEQ Review of Response Activity Plan

*This form is required for submittal of a request for the DEQ to review a Response Activity Plan, under Section 20114b, Part 201, Environmental Remediation, of the Natural Resources and Environmental Protection Act, 1994 PA 451, as amended.*

**Section A: Type of Response Activity Plan being Submitted (Check all that apply):**

| | | | |
|---|---|---|---|
| Remedial Investigation | ☐ | 20b(2)Site Specific Criteria *(modification of generic criteria)* | ☐ |
| Evaluation Plan | ☐ | | |
| Feasibility Study | ☐ | 20b(3) Site Specific Criteria or Surrogate *(no generic criteria available)* | ☐ |
| Remedial Action Plan | ☐ | | |
| Interim Response Plan | ☐ | Section 20118(4) and (5) Request | ☐ |
| Mixing Zone Request | ☐ | Land or Resource Use Restrictions | ☐ |
| 20e(14) De Minimus GSI Impact | ☐ | Other, Specify: Response Activity Report | ☒ |

The Response Activity Plan addresses the entire facility: ☒
(entire facility as defined by Part 201, all releases, hazardous substances, and environmental media)

The Response Activity Plan does not address the entire facility: ☐
*Please specify the release(s), hazardous substance(s), environmental media, and/or portions of the facility addressed by the Response Activity Plan.*

**Section B: Facility/Property Subject to (Check all that apply):**

| | |
|---|---|
| Facility regulated under Part 201<br>Part 201 Facility ID (if known): | ☐ |
| Leaking Underground Storage Tank regulated pursuant to Part 213<br>Part 211/213. Facility ID, if known: | ☐ |
| Oil or gas production and development regulated pursuant to Part 615 or 625 | ☐ |
| Licensed landfill regulated pursuant to Part 115 | ☐ |
| Licensed hazardous waste treatment, storage, or disposal facility regulated pursuant to Part 111 | ☐ |
| Consent Agreement or other legal agreement with the MDEQ | ☐ |

**Section C: Facility and Locational Information:**

Facility Name: Medical Center Court Apartments

Street Address of Property: 1005 Maiden Lane

City: Ann Arbor State: MI Zip: 48105

Property Tax ID (include all applicable IDs): 09-09-21-302-040, 09-09-21-302-038, and 09-09-21-302-042

Status of submitter relative to the property (check all that apply):

| | Former | Current | Prospective |
|---|---|---|---|
| Owner | ☐ | ☒ | ☐ |
| Operator | ☐ | ☒ | ☐ |

County: Washtenaw
City/Village/Township: City of Ann Arbor
Town: 02S Range: 06E Section: 21
Quarter: SW Quarter-Quarter: SE

Decimal Degrees Latitude: 42.2898
Decimal Degrees Longitude: -83.7345

Reference point for latitude and longitude:
Center of site ☒ Main/front door ☐
Front gate/main entrance ☐ Other ☐

Collection method:
Survey ☐ GPS ☐ Interpolation ☒

**Request for DEQ Review of Response Activity Plan**

**Section D: Submitter Information:**

Entity/person requesting review: McKinley Associates, Inc.
Contact Person (name and title): Nate Lewis, VP, Director of Real Estate Transaction Services
Submitter Address: 320 North Main Street State: Michigan Zip: 48104
City: Ann Arbor E-Mail: nlewis@mckinley.com
Telephone: 734-769-8520
Relationship of contact person to the submitter: VP, Director of Real Estate Transaction Services Company: McKinley Associates, Inc.
Owner Name, if different from submitter: State: Zip:
Address: E-Mail:
City:
Telephone:

**Section E: Are/were the following present at the facility (Check all that apply):**

| | Current | Previous | Unknown |
|---|---|---|---|
| Mobile or Migrating Non Aqueous Phase Liquids (NAPL) | ☐ | ☐ | ☐ |
| Soil contamination above any residential criteria | ☐ | ☐ | ☐ |
| Soil contamination above any non-residential criteria | ☐ | ☐ | ☐ |
| Soil aesthetic impacts | ☐ | ☐ | ☐ |
| Groundwater contamination above any residential criteria | ☒ | ☐ | ☐ |
| Groundwater contamination above any non-residential criteria | ☒ | ☐ | ☐ |
| Groundwater aesthetic impacts | ☐ | ☐ | ☐ |
| Soil Gas contamination above residential vapor intrusion (VI) screening levels | ☒ | ☐ | ☐ |
| Soil Gas contamination above non-residential VI screening levels | ☐ | ☐ | ☐ |
| Conditions immediately dangerous to life or health (IDLH) | ☐ | ☐ | ☐ |
| Fire & Explosion hazards related to releases | ☐ | ☐ | ☐ |
| Contamination existing in drinking water supply | ☐ | ☐ | ☐ |
| Imminent threat to drinking water supply | ☐ | ☐ | ☐ |
| Impact to Surface Water | ☐ | ☐ | ☐ |
| Surface Water Sediments above screening levels | ☐ | ☐ | ☐ |
| | ☐ | ☐ | ☐ |

**Section F: The following questions assist DEQ in evaluating this request.**

**Known or Suspected Contaminant(s) Type (Check all that apply):**
Petroleum ☐ Volatile Organic Compounds ☒ Metals ☐ Other ☐

**Current Site Status (Check all that apply):**
Undergoing property transfer ☐ Active operations ☒ Inactive operation ☐

**Current Property Use:**
Residential ☒
Non-residential ☐

**Anticipated Property Use:**
Residential ☒
Non-residential ☐

**Estimated Area of Contamination Addressed in Response Action Plan (Cumulative):**
Currently undetermined ☐ < 0.5 acre ☐ > 0.5 acre ☒

**Migration:**

| | **Yes** | **No** | **Unknown** |
|---|---|---|---|
| Has contamination migrated beyond the property **boundaries?** | ☐ | ☐ | ☒ |
| Has the Notice of Migration been submitted? | ☐ | ☒ | ☐ |

**Request for DEQ Review of Response Activity Plan**

**Facility Investigation Status:**

Ongoing ☐ Complete ☒

**Facility Response Activity Status (Check all that apply):**

None ☐ IR Implemented ☐ Response Activity Ongoing ☐ Response Activity Completed ☒

**Drinking Water Supply for Facility (Check all that apply):**

Municipal ☒ Private Well(s) ☐ No Current Water Supply ☐ Municipal Available ☐

**On-site Well(s) (Check all that apply):**

Drinking Water ☐ Industrial/Commercial Production ☐ Agricultural/Irrigation ☐ No well on-site ☒
Approximate Depth of Well(s):

**Local Drinking Water Supply:**

Is facility in a designated Wellhead Protection Area? Yes ☐ No ☒
Distance to nearest off-site drinking water well: 1,835 feet north Private/Commercial ☒ Municipal ☐

**Surface Water Bodies on or Adjacent to Facility (Check all that apply):**

Wetlands ☐ Ditch ☐ Stream/River ☒ Lake/Pond ☐

**Local Surface Water Bodies:**

Distance to nearest wetland: 0.5 miles east Ditch: >1 Mile Stream/River:750 feet east Lake/Pond: 2,500 feet north

**Have other plans been submitted for this facility?** NO

Facility Name, if different than this submittal:
Date and Name of most recent submittal:

**Section G: Environmental Professional Signature:**

*With my signature below, I certify that this plan and all related materials are true, accurate, and complete to the best of my knowledge and belief.*

Signature: Date:

Printed Name: Jennifer Ritchie

Company of Environmental Professional: PM Environmental, Inc.

Address: 4080 Eleven Mile Road

City: Berkley State: Michigan Zip: 48072

Telephone: 248-414-1430 E-mail address: ritchie@pmenv.com

**Section H: Submitter Signature:**

*With my signature below, I certify that this plan and all related materials are true, accurate, and complete to the best of my knowledge and belief and I am legally authorized to sign for the submitter*

Signature: Date:

Printed name: Nate Lewis

Title/Relationship of signatory to submitter: VP, Director of Real Estate Transaction Services (McKinley Associates, Inc.)

Address: 320 North Main Street

City: Ann Arbor State: Michigan Zip: 48104

Telephone: 734-769-8520 E-Mail address: nlewis@mckinley.com

**Request for DEQ Review of Response Activity Plan**

This form and the Response Activity Plan should be submitted to the MDEQ Remediation & Redevelopment Division District Office for the county in which the property is located, unless the response activity is related to a facility that is regulated by another MDEQ Division. A district map is located at www.michigan.gov/deqrrd. If regulated by another division, contact should be made with that division for information on where to submit the form and plan.

PM ENVIRONMENTAL
Risk Well Managed

Environmental & Engineering Services Nationwide

ENVIRONMENTAL SERVICES

BUILDING ARCHITECTURE, ENGINEERING & SCIENCE

INDUSTRIAL HYGIENE SERVICES

BROWNFIELDS & ECONOMIC INCENTIVES CONSULTING

# RESPONSE ACTIVITY REPORT

1005 Maiden Lane | Ann Arbor, Michigan
PM Project Number 01-5623-0-007

*Prepared for:*

**Berkadia Commercial Mortgage LLC**
7500 Old Georgetown Road, Suite 1275
Bethesda, Maryland 20814

*Prepared by:*

**PM Environmental, Inc.**
4080 West 11 Mile Road
Berkley, Michigan 48072

Know Your Risk.
Take Control.
Work with the Experts.

www.pmenv.com

PM ENVIRONMENTAL
Risk Well Managed

**Detroit**
4080 W. 11 Mile Road
Berkley, MI 48072
f: 877.884.6775
t: 248.336.9988

**Lansing**
3340 Ranger Road
Lansing, MI 48906
f: 877.884.6775
t: 517.321.3331

**Grand Rapids**
560 5th Street NW,
Suite 301
Grand Rapids, MI 49504
f: 877.884.6775
t: 616.285.8857

November 10, 2015

Mr. Dan Hamel
Michigan Department of Environmental Quality
Jackson District Office
301 East Louis Glick Highway
Jackson, Michigan 49201-1556

**RE: Response Activity Report for the Medical Center Court Apartments Located at 1005 Maiden Lane, Ann Arbor, Michigan PM Environmental, Inc. Project No. 01-5623-0-007**

Dear Mr. Hamel:

Enclosed is a copy of a Response Activity Report submitted under Section 20114b(1) of Part 201, Environmental Remediation of PA 451, as amended. The Response Activity Report outlines the response activities already taken by the property owner, McKinley Associates, Inc. as part of refinancing with Berkadia Commercial Mortgage LLC and the United States Department of Housing and Urban Development (HUD).

If you have any questions regarding the information in this report, please contact us at 800-313-2966.

If you have any question or concerns, please feel free to contact our office at (248) 336-9988.

Sincerely,
**PM ENVIRONMENTAL, INC.**

Aaron Snow
Staff Scientist

Jennifer Ritchie, CPG
Regional Manager

Enclosure

PM ENVIRONMENTAL
Risk Well Managed

**Detroit**
4080 W. 11 Mile Road
Berkley, MI 48072
f: 877.884.6775
t: 248.336.9988

**Lansing**
3340 Ranger Road
Lansing, MI 48906
f: 877.884.6775
t: 517.321.3331

**Grand Rapids**
560 5th Street NW,
Suite 301
Grand Rapids, MI 49504
f: 877.884.6775
t: 616.285.8857

November 10, 2015

Ms. Angela Perrin
Berkadia Commercial Mortgage LLC
7500 Old Georgetown Road, Suite 1275
Bethesda Maryland 20814

**RE: Response Activity Report for the Medical Center Court Apartments Located at 1005 Maiden Lane, Ann Arbor, Michigan PM Environmental, Inc. Project No. 01-5623-0-007**

Dear Ms. Perrin:

Enclosed is a copy of a Response Activity Report submitted under Section 20114b(1) of Part 201, Environmental Remediation of PA 451, as amended. The Response Activity Report outlines the response activities already taken by the property owner, McKinley Associates, Inc. as part of refinancing with Berkadia Commercial Mortgage LLC and the United States Department of Housing and Urban Development (HUD).

**THIS REPORT WAS PREPARED FOR THE EXCLUSIVE USE OF MCKINLEY ASSOCIATES, INC., BERKADIA COMMERCIAL MORTGAGE, LLC, AND UNITED STATES DEPARTMENT OF HOUSING AND URBAN DEVELOPMENT, EACH OF WHOM MAY RELY ON THE REPORT'S CONTENTS.**

If you have any question or concerns, please feel free to contact our office at (248) 336-9988.

Sincerely,
**PM ENVIRONMENTAL, INC.**

Aaron Snow
Staff Scientist

Jennifer Ritchie, CPG
Regional Manager

Enclosure

## EXECUTIVE SUMMARY

PM Environmental, Inc. (PM) has prepared this Response Activity Plan on behalf of McKinley Associates, Inc. and Berkadia Commercial Mortgage LLC for the Medical Center Court Apartments located at 1005 Maiden Lane, Ann Arbor, Washtenaw County, Michigan (hereafter referred to as the "subject property") in accordance with Part 201, Environmental Remediation, of the Natural Resources and Environmental Protection Act, 1994 PA 451, as amended (NREPA).

A Phase II Environmental Site Assessment (ESA) was conducted in September 2015 to assess the recognized environmental conditions (RECs) identified in PM's September 3, 2015 Phase I ESA and to further evaluate exposure pathways due to the groundwater contamination plume migrating from the west adjoining property beneath the subject property.

Concentrations of tetrachloroethylene were detected in the soil, groundwater, and soil gas samples collected from the subject property above applicable Part 201 Residential cleanup criteria and/or Vapor Intrusion Screening Levels (VISLs). However, based on the known history of the subject property, the known history of the western adjoining property, the documented tetrachloroethylene plume on the western adjoining property, the documented groundwater flow to the east-northeast, and the absence of an onsite source of tetrachloroethylene, it is evident that the tetrachloroethylene plume associated with the western adjoining property has migrated onto the subject property toward the Huron River.

The purpose of the response activities already completed were to effectively address the relevant pathways to prevent unacceptable exposures and to allow the property to continue Residential use. A Certificate of Completion from the DEQ is requested based on the response activities already completed that verified the absence of a complete exposure pathway from the groundwater contamination that has migrated onto the subject property from the west adjoining property.

The subject property consists of three parcels totaling 5.69 acres of land located north of Maiden Lane between Broadway Street and Island Drive. The subject property is developed with seven three story apartment buildings which were constructed in 1964/1965. The apartment buildings contain a total of 201 dwelling units, with a net rentable area of 139,230 square feet. Three asphalt paved parking areas are located throughout the subject property, with groomed grass and landscaping located throughout the remainder of the subject property and in the right-of-ways. A small maintenance shed is located in the southern portion, a gazebo is located in the northern portion, and a creek traverses the northwestern corner of the subject property. Additionally, an entrance road, identified as Nielsen Court, runs from south to northeast through the center of the subject property. Current operations consist of typical residential apartment complex activities.

Standard and other historical sources document that the subject property was used for agricultural purposes from at least 1937 until the construction of the current buildings in 1964/1965. Outbuildings associated with a former greenhouse on the southeast adjoining property were present in the eastern portion of the subject property from between 1925 and 1937 until between 1960 and 1964. The subject property has been developed as a residential apartment complex with typical residential and general office activities since 1964/1965.

**THIS REPORT WAS PREPARED FOR THE EXCLUSIVE USE OF MCKINLEY ASSOCIATES, INC., BERKADIA COMMERCIAL MORTGAGE, LLC, AND UNITED STATES DEPARTMENT OF HOUSING AND URBAN DEVELOPMENT, EACH OF WHOM MAY RELY ON THE REPORT'S CONTENTS.**

On September 10, 23, and 24, 2015, and October 14, 2015, PM completed a scope of work consisting of the advancement of 14 soil borings (SB-1 through SB-14), the installation of 13 temporary monitoring wells (TMW-1 though TMW-6, and TMW-8 through TMW-14), the installation of four soil gas sample points (SG-1 through SG-4), the installation of four sub-slab soil gas points (SS-1 through SS-2), the installation of 40 indoor air sample canisters (IA-1 through IA-40), and the collection of soil, groundwater, soil gas, and indoor air samples for laboratory analysis of volatile organic compounds (VOCs), polynuclear aromatic hydrocarbons (PNAs), nitrate, pesticides, herbicides, phosphorous, arsenic, and lead, or some combination thereof.

A concentration of tetrachloroethylene was detected in soil sample SB-4 (6.5-7.5 feet bgs) and in groundwater samples TMW-1, TMW-2, TMW-3, TMW-4, TMW-9, TMW-11, and TMW-13 above the Part 201 Residential and Nonresidential Drinking Water Protection (DWP), Drinking Water (DW), Groundwater Surface Water Interface Protection (GSIP) and/or Groundwater Surface Water Interface (GSI) cleanup criteria, and Residential and/or Nonresidential VISLs. No concentrations of VOCs were detected in any of the remaining soil and groundwater samples collected from the subject property above laboratory method detection limits (MDLs). No concentrations of PNAs, nitrate, pesticides, herbicides, phosphorous, arsenic, and/or lead were detected in any of the soil and groundwater samples collected from the subject above laboratory MDLs, and/or the most restrictive Part 201 Residential cleanup criteria.

Based on the analytical results, no contamination was identified in the soil and groundwater samples associated with the former use of the subject property for greenhouse operations. The concentrations of tetrachloroethylene detected in the soil and groundwater samples are attributed to the contamination on the west adjoining property that has migrated onto the subject property.

Concentrations of tetrachloroethylene were detected in the soil gas sample collected from SG-1 and the sub-slab soil gas samples collected from SS-1 and SS-3 above the Residential VISLs. No other concentrations of VOCs were detected in any of the soil gas samples collected from the subject property above laboratory MDLs, and/or the most restrictive Residential VISLs.

A concentration of naphthalene was detected in the indoor air sample collected from IA-10 above the Residential VISLs. However, based on the known history of the subject property, the absence of a subsurface source of naphthalene, the absence of naphthalene concentrations in the soil and groundwater samples collected from the subject property, and the absence of a naphthalene concentration above Residential VISLs in the sub-slab soil gas sample collected from SS-2 in the same apartment unit as IA-10, the concentration of naphthalene detected in the indoor air sample collected from IA-10 is likely related to background interference. No concentrations of VOCs were detected in any of the remaining indoor air samples collected from the subject property above laboratory MDLs, and/or the most restrictive Residential VISLs.

Per Section 20126(4)(c) of Michigan Part 201, an owner or operator of property onto which contamination has migrated is not a liable party and as such, has no obligation for assessment or cleanup response activities. The RECs identified in PM's September 2015 Phase I ESA have been adequately assessed, and based upon the offsite source and the liability protections afforded by Michigan Part 201, no further action is required at this time.

PM on behalf of McKinley Associates, Inc. is Requesting a Certificate of Completion from the MDEQ for the subject property. Request for Certificate of Completion from DEQ (EQP4400) and Request for DEQ Review of Response Activity Plan (EQP4028) forms are included within this report.

Please feel free to contact our office at 248.336.9988 to discuss this report.

**Report Prepared By:**

Aaron Snow
Staff Scientist

**Report Reviewed By:**

Jennifer Ritchie, CPG
Regional Manager

**TABLE OF CONTENTS**

1.0 INTRODUCTION AND PURPOSE ..... 1
1.1 Site Description and Background ..... 1
1.2 Intended Use of the Subject Property ..... 1
1.3 Subject Property Facility/Site Status ..... 2

2.0 FACILITY CHARACTERIZATION, CRITERIA EVALUATION, AND REPONSE ACTIVITIES 2
2.1 Previous Site Investigations - Subject Property and West Adjoining Property ..... 3
2.2 Current Site Investigation of the Subject Property ..... 5
2.2.1 Quality Control/Quality Assurance and Investigation Techniques ..... 8
2.3 Geology and Hydrogeology ..... 10
2.4 Analytical Results ..... 10
2.4.1 Soil Analytical Results ..... 10
2.4.2 Groundwater Analytical Results ..... 11
2.4.3 Soil Gas Analytical Results ..... 11
2.4.4 Indoor Air Analytical Results ..... 12

3.0 EXPOSURE PATHWAY EVALUATION ..... 12

4.0 CONCLUSIONS AND RECOMMENDATIONS ..... 13

5.0 REFERENCES AND SUPPORTING INFORMATION ..... 14

## FIGURES

Figure 1: Property Vicinity Map
Figure 2: Generalized Diagram of the Subject Property and Adjoining Properties
Figure 3: Soil Boring/Temporary Monitoring Well/Soil Gas Sample Location Map with Soil Analytical Results
Figure 4: Soil Boring/Temporary Monitoring Well/Soil Gas Sample Location Map with Groundwater Analytical Results
Figure 5: Soil Boring/Temporary Monitoring Well/Soil Gas Sample Location Map with Soil Gas Analytical Results
Figure 6A: Indoor Air Sample Location Map with Indoor Air Sample Analytical Results
Figure 6B: Indoor Air Sample Location Map with Indoor Air Sample Analytical Results
Figure 6C: Indoor Air Sample Location Map with Indoor Air Sample Analytical Results

## TABLES

Table 1: Summary of Soil Analytical Results: VOCs, PNAs, Nitrate, Pesticides, Herbicides, Phosphorous, Arsenic, and Lead
Table 2: Summary of Groundwater Analytical Results: VOCs and PNAs
Table 3: Summary of Soil Gas Analytical Results: VOCs
Table 4: Summary of Indoor Air Analytical Results: VOCs

## APPENDICES

Appendix A: Phase I ESA Report, September 3, 2015
Appendix B: Previous Figures and Tables from West Adjoining Property
Appendix C: Soil Boring Logs
Appendix D: Laboratory Analytical Reports
Appendix E: Professional Qualification Statements

# 1.0 INTRODUCTION AND PURPOSE

PM Environmental, Inc. (PM) has prepared this Response Activity Plan on behalf of McKinley Associates, Inc. and Berkadia Commercial Mortgage LLC for the Medical Center Court Apartments located at 1005 Maiden Lane, Ann Arbor, Washtenaw County, Michigan (hereafter referred to as the "subject property") in accordance with Part 201, Environmental Remediation, of the Natural Resources and Environmental Protection Act, 1994 PA 451, as amended (NREPA).

Concentrations of tetrachloroethylene were detected in the soil, groundwater, and soil gas samples collected from the subject property above applicable Part 201 Residential cleanup criteria and/or Vapor Intrusion Screening Levels (VISLs). However, based on the known history of the subject property, the known history of the western adjoining property, the documented tetrachloroethylene plume on the western adjoining property, the documented groundwater flow to the east-northeast, and the absence of an onsite source of tetrachloroethylene, it is evident that the tetrachloroethylene plume associated with the western adjoining property has migrated onto the subject property toward the Huron River.

The purpose of the response activities already completed were to effectively address the relevant pathways to prevent unacceptable exposures and to allow the property to continue Residential use. A Certificate of Completion from the DEQ is requested based on the response activities already completed that verified the absence of a complete exposure pathway from the groundwater contamination that has migrated onto the subject property from the west adjoining property.

## 1.1 Site Description and Background

The subject property consists of three parcels totaling 5.69 acres of land located north of Maiden Lane between Broadway Street and Island Drive. The subject property is developed with seven three story apartment buildings constructed in 1964/1965, each consisting of a garden level with two floors above, and no basement. The apartment buildings contain a total of 201 apartment units, with a net rentable area of 139,230 square feet. Three asphalt paved parking areas are located throughout the subject property, with groomed grass and landscaping located throughout the remainder of the subject property and in the right-of-ways. A small maintenance shed is located in the southern portion, a gazebo is located in the northern portion, and a creek traverses the northwestern corner of the subject property. Additionally, an entrance road, identified as Nielsen Court, runs from south to northeast through the center of the subject property. Current operations consist of typical residential apartment complex activities.

Standard and other historical sources document that the subject property was used for agricultural purposes from at least 1937 until the construction of the current buildings in 1964/1965. Outbuildings associated with a former greenhouse on the southeast adjoining property were present in the eastern portion of the subject property from between 1925 and 1937 until between 1960 and 1964. The subject property has been developed as a residential apartment complex with typical residential and general office activities since 1964/1965.

## 1.2 Intended Use of the Subject Property

McKinley Associates, Inc. will continue to operate the Medical Center Court Apartments for general residential and office activities.

### 1.3 Subject Property Facility/Site Status

Since the contamination identified on the subject property has migrated from the west adjoining property, the subject property is not a facility per Section 20126(4)(c) of Michigan Part 201, an owner or operator of property onto which contamination has migrated is not a liable party and as such, has no obligation for assessment or cleanup response activities. Based on a Simulated Groundwater Flow Conditions Figure dated April 23, 2007 created by CRA, the known chlorinated solvent groundwater plume was shown to migrate across the center of the subject property. The current groundwater data on the subject property matches the simulated figure. Remediation/mitigation measures were identified to prevent the migration of the chlorinated solvent plume onto the subject property; however, no remediation/mitigation was conducted.

Concentrations of tetrachloroethylene were identified on the subject property in groundwater and soil gas above the Part 201 Residential and Nonresidential Drinking Water (DW) and Groundwater Surface Water Interface (GSI) cleanup criteria and Residential soil gas Vapor Intrusion Screening Levels (VISLs). However, no concentrations of tetrachloroethylene were identified in the indoor samples above Residential VISLs collected within the garden level apartments at the subject property.

The subject property is currently zoned Central Business District, and will be utilized for mixed Residential and Nonresidential use, which is consistent with a Residential property use in accordance with Part 201. Based upon the current zoning and planned Residential use of the subject property, the Part 201 Residential cleanup criteria for all relevant pathways are applicable.

## 2.0 FACILITY CHARACTERIZATION, CRITERIA EVALUATION, AND REPONSE ACTIVITIES

PM completed a Phase I Environmental Site Assessment (ESA) dated September 3, 2015 in conformance with the scope and limitations of ASTM Practice E E-1527-13 (i.e., the 'ASTM Standard'). A copy of the September 2015 Phase I ESA, including photographs of the subject property, is included in Appendix A.

The following onsite recognized environmental condition (REC) was identified:

- The subject property was occupied by outbuildings associated with a former greenhouse on the southeast adjoining property, which were present in the eastern portion of the subject property from between 1925 and 1937 until between 1960 and 1964. PM was unable to determine the former use of the buildings on the subject property associated with the greenhouse, however, would have likely been used for growing and/or storage associated with the main greenhouse building located on the southeastern adjoining property. Historical waste streams associated with the former greenhouse operations would have consisted of general hazardous substances and/or petroleum products. This time period preceded major environmental regulations and current waste management and disposal procedures. The historical waste management practices associated with potential usage and/or storage of herbicides, pesticides, and fertilizers are unknown.

The following adjoining and/or nearby RECs were identified:

- The southeast adjoining property, identified as 1021 Maiden Lane, was historically occupied by a greenhouse from at least 1916 until at least the 1990s. Historical interior waste streams associated with the former greenhouse operations would have consisted of general hazardous substances and/or petroleum products. This time period preceded

major environmental regulations and current waste management and disposal procedures. The historical waste management practices associated with potential usage and/or storage of herbicides, pesticides, and fertilizers are unknown.

- The west adjoining property is identified as an open Leaking Underground Storage Tank (LUST) site with a release reported in October 2003, a state and tribal Brownfield site and a Baseline Environmental Assessment (BEA) site. Additionally, the property was historically occupied by gasoline dispensing, dry cleaning, and scrap metal recycling operations, and contained a former aboveground storage tank (AST), which likely contained tetrachloroethylene, a dry cleaning solvent. Analytical results from previous subsurface investigations completed in 2001/2002 document tetrachloroethylene, trichloroethylene, and/or 1,1-dichloroethane (dry cleaning solvent and biodegradation contaminants) was detected in soil and/or groundwater above Part 201 Residential and Nonresidential Drinking Water Protection (DWP)/Drinking Water (DW), Groundwater Surface Water Interface Protection (GSIP)/Groundwater Surface Water Interface (GSI), Soil Volatilization to Indoor Air Inhalation (SVII), and Direct Contact (DC) cleanup criteria, and/or Soil Saturation Concentrations (Csat) screening levels. Additionally, concentrations of benzene, toluene, ethylbenzene, and xylenes (collectively known as BTEX) and polynuclear aromatic compounds (PNAs) were also detected above Part 201 cleanup criteria. The BEA was affirmed by the Michigan Department of Environmental Quality (MDEQ) in August 2005. Based on the poor quality and resolution of the figure included within the report, PM was unable to verify the specific analytical results of the soil borings nearest to the subject property boundary. However, soil and groundwater contamination plumes were identified in the figure and appear to have migrated in an east-northeasterly flow direction, toward the subject property. Additionally, the nearest soil borings were completed within 100 feet of the subject property boundary and nearest buildings along the western portion of the subject property. Based on the documented soil and groundwater contamination, depth of groundwater at 12.0 feet below ground surface (bgs) with a groundwater flow direction toward the subject property, no previous soil borings completed on the subject property to define the extent of the migrating contamination, and over 10 years since the last documented site investigation activities, the potential exists for the documented soil, groundwater, or vapor contamination to have migrated onto the subject property.

### 2.1 Previous Site Investigations - Subject Property and West Adjoining Property

PM reviewed the following previous environmental reports for the subject property. Relevant portions of the reports are included in Appendix D of PM's September 2015 Phase I ESA (Appendix A).

| Name of Report | Date of Report | Company that Prepared Report |
|---|---|---|
| Lead Based Paint (LBP) Operations & Maintenance (O&M) Plan | October 15, 2003 | Aaron & Wright Technical Services, Inc. (AW) |
| Phase I ESA | June 21, 2010 | Dominion Due Diligence Group (D3G) |
| Asbestos O&M Plan | October 6, 2010 | D3G |

**<u>2010 Phase I ESA (D3G)</u>**

The Phase I ESA was prepared in general accordance with ASTM Standard E 1527-05 Phase I

ESA and the United States Department of Housing and Urban Development (HUD) Map Chapter 9 Environmental Review requirements. At the time of the Phase I ESA, the subject property was occupied by the current buildings and general residential and office activities. D3G documented similar historical information as included in PM's 2015 Phase I ESA and summarized a previous Phase I ESA completed by Aaron & Wright Technical Services, Inc. (AW) dated October 15, 2003. D3G documented no RECs were identified in AW's 2003 Phase I ESA, however, a LBP O&M Plan was completed.

D3G did not identify any RECs associated with the subject property. However, based on the presence of a portion of the subject property being located in Zone AE, D3G recommended that an ALTA/ACSM Land Title Survey be completed, and in the event that the development directly or indirectly impacts areas identified in the floodplain, the subject property must comply with Executive Order (EO) 11988 "Floodplain Management" requirements.

D3G did not review available Sanborn maps as part of the 2010 Phase I ESA, and review of the regulatory database table within the report does not list Michigan's BEA Database as being part of their review. PM has identified these as deficiencies, and based on review of the BEA completed for the west adjoining property, has identified RECs associated with the west adjoining BEA site, and the historical use of the southeast adjoining property and portion of the subject property.

PM reviewed the following previous environmental reports for the west adjoining property. Relevant figures and tables are included in Appendix B of this report. Copies of the reports are available at the MDEQ Jackson District Office.

| Name of Report | Date of Report | Company that Prepared Report |
|---|---|---|
| Limited Phase II Subsurface Investigation | December 21, 2001 | Atwell-Hicks, Inc. |
| Final Technical Memorandum #1 | January 29, 2003 | Harding ESE of Michigan, Inc. |
| Site Characterization Report | July 7, 2003 | Atwell-Hicks, Inc. |
| BEA (923 Maiden Lane) | November 26, 2003 | Atwell-Hicks, Inc. |
| Interim Response Work Plan | May 25, 2005 | Conestoga-Rovers & Associates (CRA) |
| BEA (923 Maiden Lane) | August 4, 2005 | CRA |
| BEA (1120 Broadway) | November 30, 2004 (Affirmed - August 5, 2005) | CRA |
| BEA (1140 Broadway) | May 6, 2006 (Affirmed - July 25, 2006) | CRA |
| Delisting Petition | April 26, 2007 | CRA |
| Interim Response Work Plan | April 27, 2007 | CRA |
| BEA (Broadway at Maiden Lane) | January 31, 2008 | CRA |

This property is identified as 923 Maiden Lane and 1120/1140 Broadway Street. The regulatory database has identified the west adjoining property as an open LUST site with a release reported in October 2003, a state and tribal Brownfield site and a BEA site. PM reviewed the reports listed

above, which documents subsurface investigations between 2001 and 2004 were completed to assess historical gasoline dispensing, dry cleaning, and scrap metal recycling operations, and a former AST that likely contained tetrachloroethylene; and the chlorinated solvent impact identified in the soil and groundwater in the area of the former Broadway Laundromat building.

Analytical results document tetrachloroethylene and associated degradation products, in soil and/or groundwater samples above the Part 201 Residential and Nonresidential DWP, SVII, and DC cleanup criteria and/or Csat screening levels (Atwell-Hicks Tables 2 through 7 and CRA Tables 1 through 3).

In 2002, the groundwater contamination plume was identified at the subject property boundary (Atwell-Hicks Figure 2). In addition, a simulated groundwater flow condition figure (CRA Figure 10) created by CRA for the 2007 Interim Response Work Plan identifies the groundwater contamination plume migrating beneath the subject property in the same area identified by PM's 2015 groundwater analytical data.

According to the 2008 BEA, CRA implemented a small pilot study beginning August 2006 following MDEQ approval to evaluate the effectiveness of sodium permanganate to reduce the tetrachloroethylene concentrations in groundwater. No further information was available.

Based on the reports associated with the west adjoining property, it appears that the groundwater contamination plume has migrated in an east-northeasterly flow direction onto the subject property toward the Huron River located east of the subject property.

### 2.2 Current Site Investigation of the Subject Property

Prior to the commencement of field activities, MISSDIG, a utility locating service, was contacted to locate utilities on or adjacent to the subject property. Utilities were marked by the respective utility companies where they entered or were located adjacent to the subject property.

On September 10, 2015, PM completed a scope of work consisting of the advancement of eight soil borings (SB-1 through SB-8), the installation of seven temporary monitoring wells (TMW-1 though TMW-6, and TMW-8), the installation of four soil gas sample points (SG-1 through SG-4), and the collection of five soil samples, seven groundwater samples, and four soil gas samples for laboratory analysis of volatile organic compounds (VOCs), PNAs, nitrate, pesticides, herbicides, phosphorous, arsenic, and lead, or some combination thereof.

On September 23 and 24, 2015, PM completed a scope of work consisting of the installation of 40 indoor air sample canisters (IA-1 through IA-40) and the collection of 40 indoor air samples for laboratory analysis of VOCs. Indoor air samples were collected from each garden-level apartment unit to assess vapor intrusion concerns identified during PM's September 2015 Phase II ESA.

On October 14, 2015, PM completed a scope of work consisting of the advancement of six soil borings (SB-9 through SB-14), the installation of six temporary monitoring wells (TMW-9 through TMW-14), the installation of four sub-slab soil gas sample points, and the collection of six groundwater samples and four sub-slab soil gas samples.

Specifically, the Phase II ESA activities were conducted in the following areas of the subject property:

## Description of Soil Boring/Temporary Monitoring Well/Soil Gas Locations

| Location and Total Depth (feet bgs) | Sample/Screen Depth (feet bgs) | Analysis | Objectives | Sample Selection (justification) |
|---|---|---|---|---|
| SB/TMW-1 (20.0) | **Soil:** 2.0-3.0 | VOCs, PNAs, nitrate, pesticides, herbicides, phosphorous, arsenic, and lead | Assess former outbuilding and associated former greenhouse operations | **Soil:** Based on the lack of field evidence of impact, a sample was collected from the sand/clay interface. **Groundwater:** Sampled. **Soil Gas:** Not sampled. |
| | **Groundwater:** 5.0-10.0 | VOCs and PNAs | | |
| SB/TMW-2/SG-1 (15.0) | **Groundwater:** 6.06-11.06 | VOCs and PNAs | Assess former outbuilding and associated former greenhouse operations | **Soil:** Based on the lack of field evidence of impact, a soil sample was not collected. **Groundwater:** Sampled. **Soil Gas:** Sampled. |
| | **Soil Gas:** 8.0 | VOCs | | |
| SB/TMW-3/SG-2 (15.0) | **Soil:** 1.0-2.0 | VOCs, PNAs, nitrate, pesticides, herbicides, phosphorous, arsenic, and lead | Assess former outbuilding and associated former greenhouse operations | **Soil:** Based on the lack of field evidence of impact, a shallow soil sample was collected from beneath the asphalt pavement. **Groundwater:** Sampled. **Soil Gas:** Sampled. |
| | **Groundwater:** 6.13-11.13 | VOCs and PNAs | | |
| | **Soil Gas:** 7.5 | VOCs | | |
| SB/TMW-4 (15.0) | **Soil:** 6.5-7.5 | VOCs and PNAs | Assess former southeast adjoining greenhouse operations | **Soil:** Based on the lack of field evidence of impact, a sample was collected directly above the saturated zone. **Groundwater:** Sampled. **Soil Gas:** Not sampled. |
| | **Groundwater:** 5.0-10.0 | | | |
| SB/TMW-5/SG-3 (15.0) | **Groundwater:** 8.06-13.06 | VOCs and PNAs | Assess former southeast adjoining greenhouse operations | **Soil:** Based on the lack of field evidence of impact, a soil sample was not collected. **Groundwater:** Sampled. **Soil Gas:** Sampled. |
| | **Soil Gas:** 7.0 | VOCs | | |
| SB/TMW-6 (15.0) | **Soil:** 8.5-9.5 | VOCs and PNAs | Assess former southeast adjoining greenhouse operations | **Soil:** Based on the lack of field evidence of impact, a sample was collected directly above the saturated zone. **Groundwater:** Sampled. **Soil Gas:** Not sampled. |
| | **Groundwater:** 7.29-12.29 | | | |

| Location and Total Depth (feet bgs) | Sample/Screen Depth (feet bgs) | Analysis | Objectives | Sample Selection (justification) |
|---|---|---|---|---|
| SB-7/SG-4 (20.0) | **Soil:** 8.0-9.0 | VOCs and PNAs | Assess former west adjoining gasoline dispensing, dry cleaning, and metal recycling operations | **Soil:** Based on the lack of field evidence of impact and the insufficient water for sample collection, a sample was collected within the saturated zone. **Groundwater:** Insufficient for sample collection. **Soil Gas:** Sampled. |
| | **Soil Gas:** 8.0 | VOCs | | |
| SB/TMW-8 (20.0) | **Groundwater:** 8.86-13.86 | VOCs | Assess former west adjoining gasoline dispensing, dry cleaning, and metal recycling operations | **Soil:** Based on the lack of field evidence of impact, a soil sample was not collected. **Groundwater:** Sampled. **Soil Gas:** Not sampled. |
| SB/TMW-9 (20.0) | **Groundwater:** 7.89-12.89 | VOCs | Further assess the extent of the chlorinated solvent plume from the west adjoining property | **Soil:** Based on the lack of field evidence of impact, a soil sample was not collected. **Groundwater:** Sampled. **Soil Gas:** Not sampled. |
| SB/TMW-10 (20.0) | **Groundwater:** 8.26-13.26 | VOCs | Further assess the extent of the chlorinated solvent plume from the west adjoining property | **Soil:** Based on the lack of field evidence of impact, a soil sample was not collected. **Groundwater:** Sampled. **Soil Gas:** Not sampled. |
| SB/TMW-11 (20.0) | **Groundwater:** 12.76-17.36 | VOCs | Further assess the extent of the chlorinated solvent plume from the west adjoining property | **Soil:** Based on the lack of field evidence of impact, a soil sample was not collected. **Groundwater:** Sampled. **Soil Gas:** Not sampled. |
| SB/TMW-12 (20.0) | **Groundwater:** 7.23-13.23 | VOCs | Further assess the extent of the chlorinated solvent plume from the west adjoining property | **Soil:** Based on the lack of field evidence of impact, a soil sample was not collected. **Groundwater:** Sampled. **Soil Gas:** Not sampled. |

| Location and Total Depth (feet bgs) | Sample/Screen Depth (feet bgs) | Analysis | Objectives | Sample Selection (justification) |
|---|---|---|---|---|
| SB/TMW-13 (20.0) | **Groundwater:** 9.97-14.97 | VOCs | Further assess the extent of the chlorinated solvent plume from the west adjoining property | **Soil:** Based on the lack of field evidence of impact, a soil sample was not collected. **Groundwater:** Sampled. **Soil Gas:** Not sampled. |
| SB/TMW-14 (20.0) | **Groundwater:** 8.32-13.32 | VOCs | Further assess the extent of the chlorinated solvent plume from the west adjoining property | **Soil:** Based on the lack of field evidence of impact, a soil sample was not collected. **Groundwater:** Sampled. **Soil Gas:** Not sampled. |
| SS-1 (Sub-Slab) | Sub-Slab | VOCs | Further assess the extent of the chlorinated solvent plume from the west adjoining property | **Soil:** Not sampled. **Groundwater:** Not encountered. **Soil Gas:** Sampled. |
| SS-2 (Sub-Slab) | Sub-Slab | VOCs | Further assess the extent of the chlorinated solvent plume from the west adjoining property | **Soil:** Not sampled. **Groundwater:** Not encountered. **Soil Gas:** Sampled. |
| SS-3 (Sub-Slab) | Sub-Slab | VOCs | Further assess the extent of the chlorinated solvent plume from the west adjoining property | **Soil:** Not sampled. **Groundwater:** Not encountered. **Soil Gas:** Sampled. |
| SS-4 (Sub-Slab) | Sub-Slab | VOCs | Further assess the extent of the chlorinated solvent plume from the west adjoining property | **Soil:** Not sampled. **Groundwater:** Not encountered. **Soil Gas:** Sampled. |

### 2.2.1 Quality Control/Quality Assurance and Investigation Techniques

The soil borings were advanced to the desired depth using a model 6712 Geoprobe® drill rig and/or a hand auger equipped with a stainless steel bucket. Soil sampling was performed for soil classification, verification of subsurface geologic conditions, and for investigating the potential and/or extent of soil and groundwater contamination at the subject property. Soil samples were generally collected on a continuous basis using a 5-foot long macro-core sampler and/or utilizing the hand auger with a stainless steel bucket. Soil boring logs are included in Appendix C.

During drilling operations, the drilling equipment was cleaned to minimize the possibility of cross contamination. These procedures included cleaning equipment with a phosphate free solution (i.e., Alconox®) and rinsing with distilled water after each sample collection. Drilling and sampling equipment was also cleaned in this manner prior to initiating field activities.

Soils collected from discrete sample intervals were screened using a photoionization detector (PID) to determine if VOCs were present. Soil from specific depths was placed in plastic bags, sealed, and allowed to volatilize. The headspace within each bag was then monitored with the PID. The PID is able to detect trace levels of organic compounds in the air space within the plastic bag. The PID utilizes a 10.6 electron volts (eV) lamp. Soil samples were collected from the soil borings based upon the highest PID reading, visual/olfactory evidence, a change in geology, surficial soil, and/or directly above saturated soil. Soil samples for VOC analysis were preserved with methanol, in accordance with Unites States Environmental Protection Agency (USEPA) method 5035. The soil samples were placed in appropriately labeled containers with Teflon lined lids and/or sanitized glass jars.

Temporary monitoring wells were installed at 13 of PM's 14 soil boring locations (TMW-1 through TMW-6, and TMW-8 through TMW-14) for groundwater sample collection. A new well assembly, consisting of a 5-foot 0.010-inch slot, schedule 40, poly-vinyl chloride (PVC) screen and PVC casing was lowered into the borehole to intersect the water table. After the screen for the well was set to the desired depth, an artificial sand pack or natural sands were allowed to collapse around the well screen. The groundwater samples were collected with care to avoid the potential for cross contamination and to prevent loss of volatiles to the atmosphere. The groundwater sample for laboratory analyses was transferred directly from the low-flow pump discharge line into an appropriately labeled sample container with a Teflon lined lid. Purge water was maintained separate and returned to the well. Temporary monitoring well construction details are included in Appendix C.

The soil and groundwater samples were placed in an ice packed cooler, and transported under chain of custody procedures for laboratory analysis within applicable holding times.

The soil gas sampling was completed in general accordance with the guidelines established in the May 2013 MDEQ Guidance Document for the Vapor Intrusion Pathway, which included the QA/QC procedures outlined below.

Prior to the collection of each soil gas sample, the sampling apparatus was determined to be leak free utilizing an isolation chamber that encompassed tubing and associated connections as well as the sampling point. The chamber was charged with helium prior to purging the sampling point of a maximum of three volumes. A helium detector was then applied to the sampling line to ensure no leaks had occurred. The sample was collected using vacuum canister methods, for laboratory analysis of VOCs. The vacuum canisters were regulated with a flow rate of 200 ml/minute, which was pre-set at the laboratory. Soil gas sample diagrams are included in Appendix C.

The soil gas samples were transported under chain of custody procedures for laboratory analysis within applicable holding times.

The soil and groundwater samples were submitted to Merit Laboratories Inc. (Merit), East Lansing, Michigan, for laboratory analysis of VOCs, PNAs, nitrate, pesticides, herbicides, phosphorous, arsenic, and lead, or some combination thereof. The soil gas samples were submitted to Merit for laboratory analysis of VOCs.

Upon completion of the investigation, temporary monitoring well and soil gas materials were removed from the borehole. The soil boring/temporary monitoring well/soil gas sample locations were abandoned by placing the soil cuttings back into the borehole, filling the void with bentonite chips, hydrating the chips, resurfacing and returning the area to its pre-drilling condition.

### 2.3 Geology and Hydrogeology

Based on a review of the soil boring logs, geology at the subject property generally consists of sandy clay or clayey sand to a depth of 6.0 feet bgs, underlain by sand or gravelly sand to a depth of at least 20.0 feet bgs, the maximum depth explored. Groundwater was encountered at an approximate depth of 9.0 feet bgs throughout the subject property. Soil boring logs are included in Appendix C, which consist of site specific geology, PID readings, temporary monitoring well and soil gas sample point construction details, and sample depths.

Previous reports for the western adjoining property document that groundwater in the area of the subject property was calculated to flow to the east-northeast towards the Huron River.

Based on the lack of water wells in the area and connection to municipal water, the drinking water pathway is not complete and the DWP and DW cleanup criteria are not applicable to the subject property.

### 2.4 Analytical Results

The analytical results for the soil and groundwater samples collected during site investigation activities conducted by PM were compared with the MDEQ Generic Cleanup Criteria and Screening Levels as presented in Part 201 Rules 299.1 through 299.50, dated December 30, 2013 entitled “Cleanup Criteria Requirements for Response Activity”, in accordance with Section 20120a(1) using the Residential and Nonresidential cleanup criteria. The analytical results for the soil gas and indoor air samples collected during site investigation activities conducted by PM were compared with MDEQ Vapor Intrusion Screening Levels (VISLs) and soil gas action levels in accordance with the May 2013 Guidance Document for the Vapor Intrusion Pathway.

The analytical results are summarized in Tables 1 through 4, and in Figures 3 through 6C. The complete analytical reports are included in Appendix D.

#### 2.4.1 Soil Analytical Results

PM’s September 2015 soil analytical results are summarized in Table 1 and on Figure 3.

A concentration of tetrachloroethylene was detected in the soil sample collected from SB-4 (6.5-7.5 feet bgs) directly above the saturated zone above the Residential and Nonresidential DWP cleanup criteria, and Residential VISLs. No concentrations of VOCs were detected in any of the remaining soil samples collected from the subject property above laboratory method detection limits (MDLs).

Concentrations of various PNAs were detected in the soil samples collected from SB-1 (2.0-3.0 feet bgs) and SB-6 (8.5-9.5 feet bgs) above laboratory MDLs, but below the most restrictive Part 201 Residential cleanup criteria.

No concentrations of nitrate were detected in the selected soil samples collected from the subject property above laboratory MDLs.

Concentrations of 4.4'-DDD and 4,4'-DDE were detected in the selected soil sample collected from SB-1 (2.0-3.0 feet bgs) above laboratory MDLs, but below the most restrictive Part 201 Residential cleanup criteria. No other concentrations of pesticides were detected in the selected soil samples collected from the subject property above laboratory MDLs.
No concentrations of herbicides were detected in the selected soil samples collected from the subject property above laboratory MDLs.

Concentrations of phosphorous were detected in the selected soil samples collected from SB-1 (2.0-3.0 feet bgs) and SB-3 (1.0-2.0 feet bgs) above laboratory MDLs, but below the most restrictive Part 201 Residential cleanup criteria.

Concentrations of arsenic and lead were detected in the selected soil samples collected from SB-1 (2.0-3.0 feet bgs) and SB-3 (1.0-2.0 feet bgs) above laboratory MDLs, but below the statewide default background levels (SDBLs) for soils in Michigan, and/or the most restrictive Part 201 Residential cleanup criteria.

Based on the analytical results, no contamination was identified in the soil samples associated with the former use of the subject property for greenhouse operations. The concentration of tetrachloroethylene detected in SB-4 (6.5-7.5 feet bgs) was sampled directly above the saturated zone and is attributed to groundwater fluctuation with the vadose zone.

### 2.4.2 Groundwater Analytical Results

PM's September and October 2015 groundwater analytical results are summarized in Table 2 and on Figure 4.

Concentrations of tetrachloroethylene were detected in the groundwater samples collected from TMW-1, TMW-2, TMW-3, TMW-4, TMW-9, TMW-11, and TMW-13 above the Part 201 Residential and Nonresidential DW and GSI cleanup criteria, and Residential and/or Nonresidential VISLs. No other concentrations of VOCs were detected in the groundwater samples collected from the subject property above laboratory MDLs and/or the most restrictive Part 201 Residential cleanup criteria.

No concentrations of PNAs were detected in any of the groundwater samples collected from the subject property above laboratory MDLs.

Based on the analytical results, no contamination was identified in the groundwater samples associated with the former use of the subject property for greenhouse operations. The concentrations of tetrachloroethylene detected in the groundwater samples are attributed to the contamination on the west adjoining property that has migrated onto the subject property.

### 2.4.3 Soil Gas Analytical Results

PM's September and October 2015 soil gas analytical results are summarized in Table 3 and on Figure 5.

Concentrations of tetrachloroethylene were detected in the soil gas sample collected from SG-1 and the sub-slab soil gas samples collected from SS-1 and SS-3 above the Residential VISLs. No other concentrations of VOCs were detected in any of the soil gas samples collected from the subject property above laboratory MDLs and/or the most restrictive Residential VISLs.

### 2.4.4 Indoor Air Analytical Results

PM's September 2015 indoor air analytical results are summarized in Table 4 and on Figures 6A through 6C.

A concentration of naphthalene was detected in the indoor air sample collected from IA-10 above the Residential VISLs. However, based on the known history of the subject property, the absence of a subsurface source of naphthalene, the absence of naphthalene concentrations in the soil and groundwater samples collected from the subject property, and the absence of a naphthalene concentration above Residential VISLs in the sub-slab soil gas sample collected from SS-2 in the same apartment unit as IA-10, the concentration of naphthalene detected in the indoor air sample collected from IA-10 is likely related to background interference. No concentrations of VOCs were detected in any of the remaining indoor air samples collected from the subject property above laboratory MDLs and/or the most restrictive Residential VISLs. Further, no concentrations of chlorinated solvents (i.e., tetrachloroethylene, trichloroethylene, etc.) were detected in any of the indoor air samples collected from the subject property above laboratory MDLs and/or the most restrictive Residential VISLs.

## 3.0 EXPOSURE PATHWAY EVALUATION

The following exposure pathways were evaluated, including: groundwater ingestion, soil leaching to groundwater, groundwater surface water interface, direct contact, and ambient and indoor air inhalation from contaminated soil and groundwater. Exposure pathways are eliminated when they are determined not to be relevant (e.g., groundwater ingestion, soil leaching to groundwater, and groundwater surface water interface) or it is demonstrated that unacceptable exposures do not exist and that response activities are not required to prevent or mitigate unacceptable exposures.

The subject property is currently zoned RC-4: Multi-Family Dwelling District. The intended use and zoning is consistent with a Residential property use in accordance with Part 201.

| EXPOSURE PATHWAYS | | | | | | |
|---|---|---|---|---|---|---|
| **Pathway** | **Exposure Pathway Relevant?** | | **If Pathway Is Relevant, Are Applicable Criteria Exceeded? (Residential)** | | | |
| | **Yes/ No** | **Justification** | **Soil** | **GW** | **Soil Gas** | **Indoor Air** |
| Groundwater Ingestion | No | • Connection to municipal water<br>• No potable or other supply wells are present on the subject property | NA | NA | NA | NA |
| Indoor Air Inhalation | Yes | • Building structures present<br>• No Indoor Air exceedances | No | No | Yes* | No** |
| Ambient Air Inhalation | Yes | • Potential exposure if surface cover removed<br>• No Ambient Air exceedances | No | NA | No | No |
| Direct Contact | Yes | • Potential exposure to parties who come in contact with subsurface soils<br>• No Direct Contact exceedances | No | NA | NA | NA |

NA – Not Applicable
GW – Groundwater
*- Concentrations of tetrachloroethylene were detected in the soil gas sample collected from SG-1 and the sub-slab soil gas samples collected from SS-1 and SS-3 above the Residential VISLs. However, no concentrations of

tetrachloroethylene were detected in any of the 40 indoor air samples collected from the subject property above the most restrictive Residential VISLs.
**- A concentration of naphthalene was detected in the indoor air sample collected from IA-10 above the Residential VISLs. However, based on the known history of the subject property, the absence of a subsurface source of naphthalene, the absence of naphthalene concentrations in the soil and groundwater samples collected from the subject property, and the absence of a naphthalene concentration above Residential VISLs in the sub-slab soil gas sample collected from SS-2 in the same apartment unit as IA-10, the concentration of naphthalene detected in the indoor air sample collected from IA-10 is likely related to background interference.

## 4.0 CONCLUSIONS AND RECOMMENDATIONS

On September 10 through October 14, 2015, PM completed a scope of work consisting of the advancement of 14 soil borings (SB-1 through SB-14), the installation of 13 temporary monitoring wells (TMW-1 though TMW-6 and TMW-8 through TMW-14), the installation of four soil gas sample points (SG-1 through SG-4), the installation of four sub-slab soil gas sample points (SS-1 through SS-4), the installation of 40 indoor air sample canisters (IA-1 through IA-40), and the collection of five soil samples, 13 groundwater samples, eight soil gas samples, and 40 indoor air samples for laboratory analysis of VOCs, PNAs, nitrate, pesticides, herbicides, phosphorous, arsenic, and lead, or some combination thereof.

A concentration of tetrachloroethylene, commonly used as a dry cleaning solvent, was detected in the soil sample collected from SB-4 (6.5-7.5 feet bgs) directly above the saturated zone above the Residential and Nonresidential DWP cleanup criteria, and Residential VISLs. No concentrations of VOCs were detected in any of the remaining soil samples collected from the subject property above laboratory MDLs.

No concentrations of PNAs, nitrate, pesticides, herbicides, phosphorous, arsenic, and lead were detected in any of the soil samples collected from the subject above laboratory MDLs, and/or the most restrictive Part 201 Residential cleanup criteria.

Concentrations of tetrachloroethylene were detected in the groundwater samples collected from TMW-1, TMW-2, TMW-3, TMW-4, TMW-9, TMW-11, and TMW-13 above the Part 201 Residential and Nonresidential DW and GSI cleanup criteria, and Residential and/or Nonresidential VISLs. No other concentrations of VOCs were detected in the groundwater samples collected from the subject property above laboratory MDLs, and/or the most restrictive Part 201 Residential cleanup criteria.

No concentrations of PNAs were detected in the select groundwater samples collected from the subject property above laboratory MDLs.

Concentrations of tetrachloroethylene were detected in the soil gas sample collected from SG-1 and the sub-slab soil gas samples collected from SS-1 and SS-3 above the Residential VISLs. No other concentrations of VOCs were detected in any of the soil gas samples collected from the subject property above laboratory MDLs, and/or the most restrictive Residential VISLs.

A concentration of naphthalene was detected in the indoor air sample collected from IA-10 above the Residential VISLs. However, based on the known history of the subject property, the absence of a subsurface source of naphthalene, the absence of naphthalene concentrations in the soil and groundwater samples collected from the subject property, and the absence of a naphthalene concentration above Residential VISLs in the sub-slab soil gas sample collected from SS-2 in the same apartment unit as IA-10, the concentration of naphthalene detected in the indoor air sample collected from IA-10 is likely related to background interference. No concentrations of VOCs were

detected in any of the remaining indoor air samples collected from the subject property above laboratory MDLs, and/or the most restrictive Residential VISLs.

Concentrations of tetrachloroethylene were detected in the soil, groundwater, and soil gas samples collected from the subject property above applicable Part 201 Residential cleanup criteria and/or VISLs. However, based on the known history of the subject property, the known history of the western adjoining property, the documented tetrachloroethylene plume on the western adjoining property, the documented groundwater flow to the east-northeast, and the absence of an onsite source of tetrachloroethylene, it is evident that the tetrachloroethylene plume associated with the western adjoining property has migrated onto the subject property toward the Huron River.

Per Section 20126(4)(c) of Michigan Part 201, an owner or operator of property onto which contamination has migrated is not a liable party and as such, has no obligation for assessment or cleanup response activities. The RECs identified in PM's September 2015 Phase I ESA have been adequately assessed, and based upon the offsite source, the absence of exposure pathways, and the liability protections afforded by Michigan Part 201, no further action is required at this time.

PM on behalf of McKinley Associates, Inc. is Requesting a Certificate of Completion from the MDEQ for the subject property.

Please feel free to contact our office at 248.336.9988 to discuss this report.

**Report Prepared By:**

Aaron Snow
Staff Scientist

**Report Reviewed By:**

Jennifer Ritchie, CPG
Regional Manager

## 5.0 REFERENCES AND SUPPORTING INFORMATION

- "Part 201 Cleanup Criteria and Part 213 Risk-based Screening Levels," Revised December 2013 and in accordance with Section 20120a(1);
- Qualification statements for PM authors of this report are provided as Appendix E.
- MDEQ Operational Memorandum No. 4 "Site Characterization and Remediation Verification – Attachment 10, Peer Review Draft Groundwater Not in an Aquifer," February 2007;
- MDEQ Operational Memorandum No. 2 "Sampling and Analysis," October 22, 2004, Revised July 5, 2007;
- MDEQ Guidance Document for the Vapor Intrusion Pathway, May 2013;

# Figures

PM ENVIRONMENTAL Environmental & Engineering Services

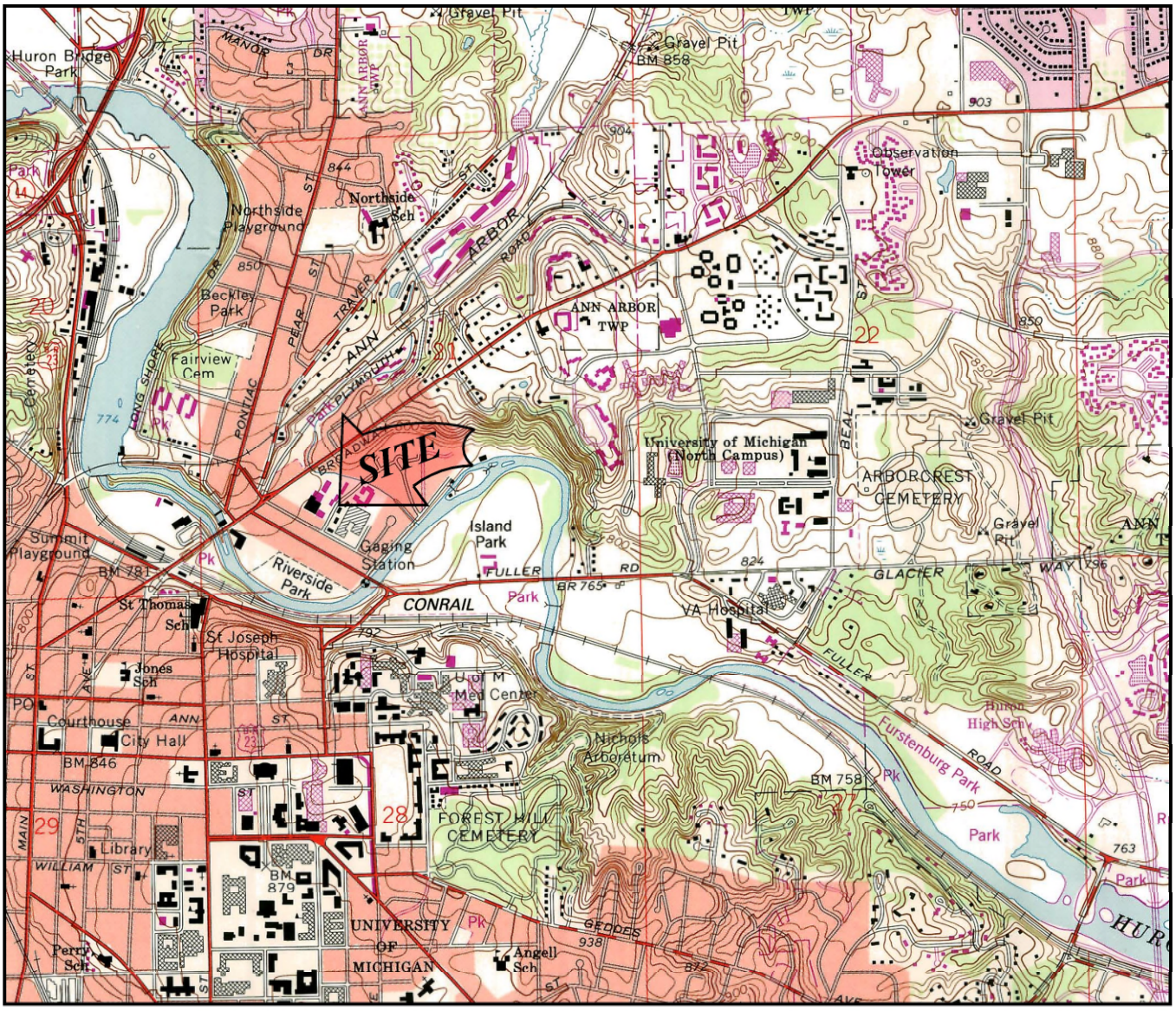

# WASHTENAW COUNTY

SCALE 1:24,000

1 MILE 1/2 MILE 0 1 MILE

FIGURE 1

**PROPERTY VICINITY MAP**

**USGS, 7.5 MINUTE SERIES**

**ANN ARBOR EAST, MI QUADRANGLE, 1965. PHOTO REVISED 1983.**

| | | | | |
|---|---|---|---|---|
| PM ENVIRONMENTAL — Environmental & Engineering Services | PROJ: MEDICAL CENTER COURT APARTMENTS 1005 MAIDEN LANE ANN ARBOR, MI | THIS IS NOT A LEGAL SURVEY | DRN BY: ES | DATE: 7/7/2015 |
| | | VERIFY SCALE 0 — 2,000' IF NOT 1" ON THIS SHEET, ADJUST SCALES ACCORDINGLY. | CHKD BY: KW | SCALE: 1" = 2,000' |
| | | | FILE NAME: 01-5623-0-004F01R00 | |

RESIDENTIAL

RESIDENTIAL

RESIDENTIAL

RESIDENTIAL

BUILDING 5

CREEK

FOOT BRIDGE

BUILDING 6

BUILDING 4

BUILDING 3

GAZEBO

FORMER BUILDING

BUILDING 7

BUILDING 2

BUILDING 1

MAINTENANCE SHED

FLOOD PLAIN AREA

VACANT LAND
FORMER GASOLINE DISPENSING,
DRY CLEANING, AND SCRAP
METAL RECYCLING OPERATIONS
(923 MAIDEN LANE AND
1120-1140 BROADWAY STREET)

RESIDENTIAL
(FORMER GREENHOUSE
OPERATIONS)

1015 WALL STREET
WALL STREET
PARKING STRUCTURE

NIELSEN COURT

MAIDEN LANE

WALL STREET

GRASS

ASPHALT PAVED

CONCRETE SIDEWALK

1001 1005 1105 1107 1109 1111 1113 1115 1117 1119 1116 1118 1120 1122 1124 1126 1128 1130 1125 1127 1129 1131 1133 1135 1137 1139 1141 1143 1145 1147 1140 1142 1144

**LEGEND:**

- SUBJECT PROPERTY
- PARCEL / LOT BOUNDARIES
- APPROXIMATE FORMER/HISTORICAL SITE FEATURES
- POLE MOUNTED TRANSFORMER
- FLOODPLAIN AREA

PM ENVIRONMENTAL | Environmental & Engineering Services

# FIGURE 2

GENERALIZED DIAGRAM OF THE SUBJECT PROPERTY AND ADJOINING PROPERTIES

PROJ:
MEDICAL CENTER COURT APARTMENTS
1005 MAIDEN LANE
ANN ARBOR, MI

| | | |
|---|---|---|
| THIS IS NOT A LEGAL SURVEY | DRN BY: ES/CS | DATE: 11/10/2015 |
| VERIFY SCALE 0 100' IF NOT 1" ON THIS SHEET, ADJUST SCALES ACCORDINGLY. | CHKD BY: KW/AS | SCALE: 1" = 100' |
| | FILE NAME: 01-5623-0-007F02R00 | |

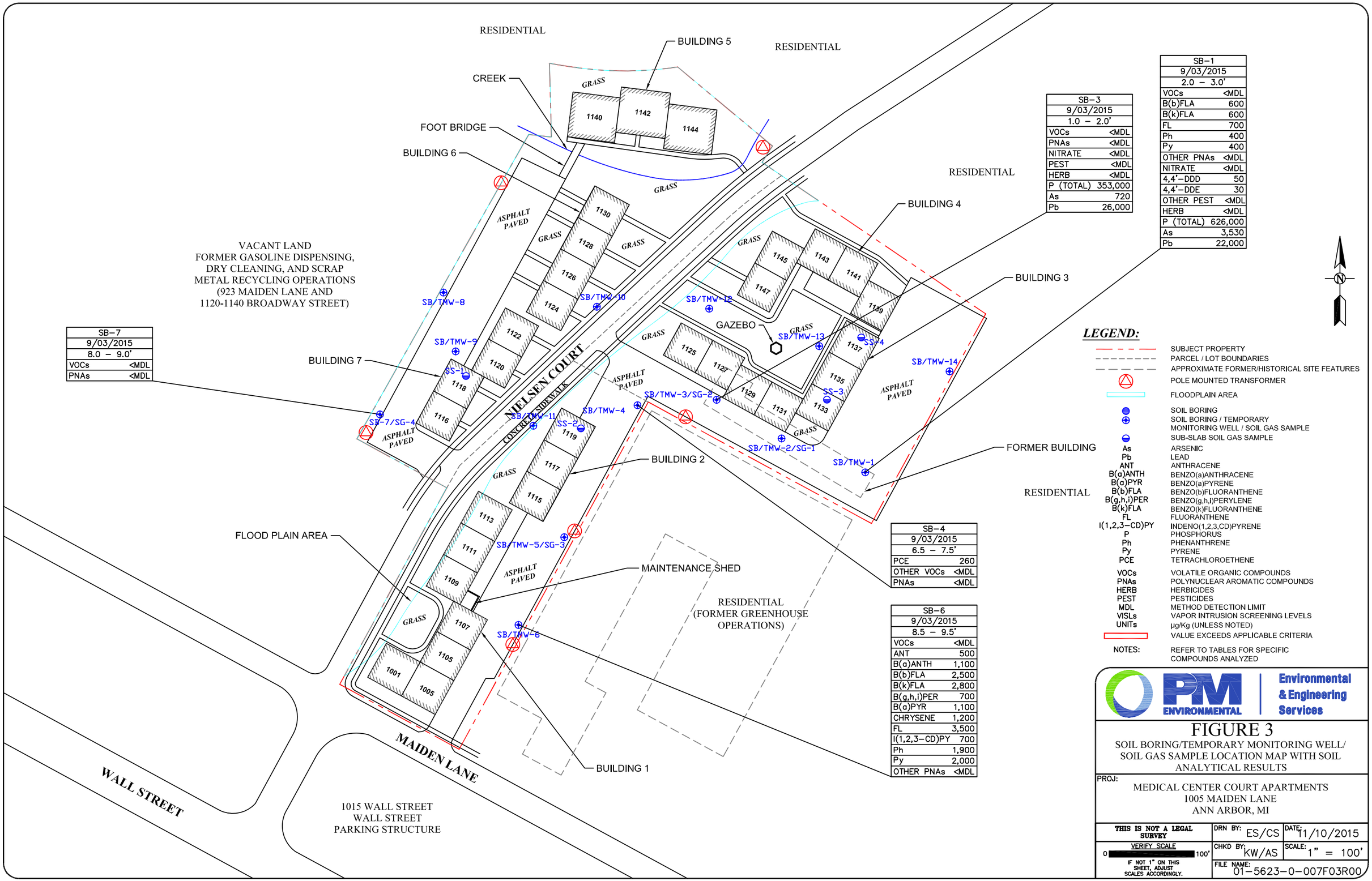


| SB-1 | |
|---|---|
| 9/03/2015 | |
| 2.0 – 3.0' | |
| VOCs | <MDL |
| B(b)FLA | 600 |
| B(k)FLA | 600 |
| FL | 700 |
| Ph | 400 |
| Py | 400 |
| OTHER PNAs | <MDL |
| NITRATE | <MDL |
| 4,4'-DDD | 50 |
| 4,4'-DDE | 30 |
| OTHER PEST | <MDL |
| HERB | <MDL |
| P (TOTAL) | 626,000 |
| As | 3,530 |
| Pb | 22,000 |

| SB-3 | |
|---|---|
| 9/03/2015 | |
| 1.0 – 2.0' | |
| VOCs | <MDL |
| PNAs | <MDL |
| NITRATE | <MDL |
| PEST | <MDL |
| HERB | <MDL |
| P (TOTAL) | 353,000 |
| As | 720 |
| Pb | 26,000 |

| SB-7 | |
|---|---|
| 9/03/2015 | |
| 8.0 – 9.0' | |
| VOCs | <MDL |
| PNAs | <MDL |

| SB-4 | |
|---|---|
| 9/03/2015 | |
| 6.5 – 7.5' | |
| PCE | 260 |
| OTHER VOCs | <MDL |
| PNAs | <MDL |

| SB-6 | |
|---|---|
| 9/03/2015 | |
| 8.5 – 9.5' | |
| VOCs | <MDL |
| ANT | 500 |
| B(a)ANTH | 1,100 |
| B(b)FLA | 2,500 |
| B(k)FLA | 2,800 |
| B(g,h,i)PER | 700 |
| B(a)PYR | 1,100 |
| CHRYSENE | 1,200 |
| FL | 3,500 |
| I(1,2,3-CD)PY | 700 |
| Ph | 1,900 |
| Py | 2,000 |
| OTHER PNAs | <MDL |

## LEGEND:

| | |
|---|---|
| | SUBJECT PROPERTY |
| | PARCEL / LOT BOUNDARIES |
| | APPROXIMATE FORMER/HISTORICAL SITE FEATURES |
| | POLE MOUNTED TRANSFORMER |
| | FLOODPLAIN AREA |
| | SOIL BORING |
| | SOIL BORING / TEMPORARY MONITORING WELL / SOIL GAS SAMPLE |
| | SUB-SLAB SOIL GAS SAMPLE |
| As | ARSENIC |
| Pb | LEAD |
| ANT | ANTHRACENE |
| B(a)ANTH | BENZO(a)ANTHRACENE |
| B(a)PYR | BENZO(a)PYRENE |
| B(b)FLA | BENZO(b)FLUORANTHENE |
| B(g,h,i)PER | BENZO(g,h,i)PERYLENE |
| B(k)FLA | BENZO(k)FLUORANTHENE |
| FL | FLUORANTHENE |
| I(1,2,3-CD)PY | INDENO(1,2,3,CD)PYRENE |
| P | PHOSPHORUS |
| Ph | PHENANTHRENE |
| Py | PYRENE |
| PCE | TETRACHLOROETHENE |
| VOCs | VOLATILE ORGANIC COMPOUNDS |
| PNAs | POLYNUCLEAR AROMATIC COMPOUNDS |
| HERB | HERBICIDES |
| PEST | PESTICIDES |
| MDL | METHOD DETECTION LIMIT |
| VISLs | VAPOR INTRUSION SCREENING LEVELS |
| UNITs | µg/Kg (UNLESS NOTED) |
| | VALUE EXCEEDS APPLICABLE CRITERIA |

NOTES: REFER TO TABLES FOR SPECIFIC COMPOUNDS ANALYZED

PM ENVIRONMENTAL | Environmental & Engineering Services

# FIGURE 3

SOIL BORING/TEMPORARY MONITORING WELL/
SOIL GAS SAMPLE LOCATION MAP WITH SOIL
ANALYTICAL RESULTS

PROJ:
MEDICAL CENTER COURT APARTMENTS
1005 MAIDEN LANE
ANN ARBOR, MI

| | | |
|---|---|---|
| THIS IS NOT A LEGAL SURVEY | DRN BY: ES/CS | DATE: 11/10/2015 |
| VERIFY SCALE 0 100' IF NOT 1" ON THIS SHEET, ADJUST SCALES ACCORDINGLY. | CHKD BY: KW/AS | SCALE: 1" = 100' |
| | FILE NAME: 01-5623-0-007F03R00 | |

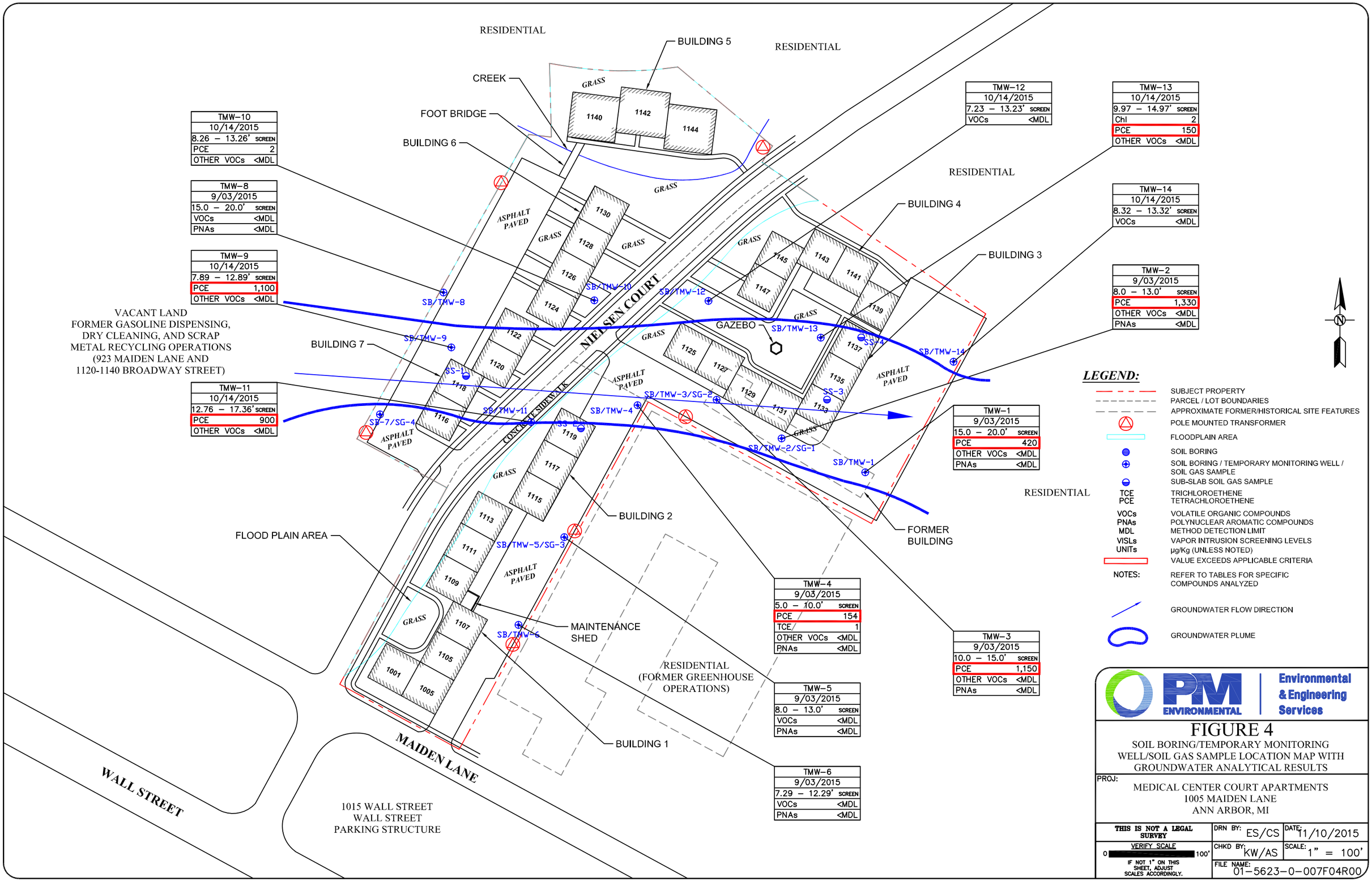

RESIDENTIAL
RESIDENTIAL
RESIDENTIAL
RESIDENTIAL
BUILDING 5
CREEK
FOOT BRIDGE
BUILDING 6
BUILDING 4
BUILDING 3
BUILDING 7
BUILDING 2
BUILDING 1
GAZEBO
NIELSEN COURT
CONCRETE SIDEWALK
ASPHALT PAVED
GRASS
VACANT LAND
FORMER GASOLINE DISPENSING,
DRY CLEANING, AND SCRAP
METAL RECYCLING OPERATIONS
(923 MAIDEN LANE AND
1120-1140 BROADWAY STREET)
FLOOD PLAIN AREA
MAINTENANCE SHED
FORMER BUILDING
RESIDENTIAL
(FORMER GREENHOUSE
OPERATIONS)
MAIDEN LANE
WALL STREET
1015 WALL STREET
WALL STREET
PARKING STRUCTURE
SB/TMW-1
SB/TMW-2/SG-1
SB/TMW-3/SG-2
SB/TMW-4
SB/TMW-5/SG-3
SB/TMW-6
SB/TMW-7/SG-4
SB/TMW-8
SB/TMW-9
SB/TMW-10
SB/TMW-11
SB/TMW-12
SB/TMW-13
SB/TMW-14
SS-1
SS-2
SS-3
SS-4
TMW-10
10/14/2015
8.26 – 13.26' SCREEN
PCE 2
OTHER VOCs <MDL
TMW-8
9/03/2015
15.0 – 20.0' SCREEN
VOCs <MDL
PNAs <MDL
TMW-9
10/14/2015
7.89 – 12.89' SCREEN
PCE 1,100
OTHER VOCs <MDL
TMW-11
10/14/2015
12.76 – 17.36' SCREEN
PCE 900
OTHER VOCs <MDL
TMW-12
10/14/2015
7.23 – 13.23' SCREEN
VOCs <MDL
TMW-13
10/14/2015
9.97 – 14.97' SCREEN
Chl 2
PCE 150
OTHER VOCs <MDL
TMW-14
10/14/2015
8.32 – 13.32' SCREEN
VOCs <MDL
TMW-2
9/03/2015
8.0 – 13.0' SCREEN
PCE 1,330
OTHER VOCs <MDL
PNAs <MDL
TMW-1
9/03/2015
15.0 – 20.0' SCREEN
PCE 420
OTHER VOCs <MDL
PNAs <MDL
TMW-4
9/03/2015
5.0 – 10.0' SCREEN
PCE 154
TCE 1
OTHER VOCs <MDL
PNAs <MDL
TMW-3
9/03/2015
10.0 – 15.0' SCREEN
PCE 1,150
OTHER VOCs <MDL
PNAs <MDL
TMW-5
9/03/2015
8.0 – 13.0' SCREEN
VOCs <MDL
PNAs <MDL
TMW-6
9/03/2015
7.29 – 12.29' SCREEN
VOCs <MDL
PNAs <MDL
LEGEND:
SUBJECT PROPERTY
PARCEL / LOT BOUNDARIES
APPROXIMATE FORMER/HISTORICAL SITE FEATURES
POLE MOUNTED TRANSFORMER
FLOODPLAIN AREA
SOIL BORING
SOIL BORING / TEMPORARY MONITORING WELL / SOIL GAS SAMPLE
SUB-SLAB SOIL GAS SAMPLE
TCE TRICHLOROETHENE
PCE TETRACHLOROETHENE
VOCs VOLATILE ORGANIC COMPOUNDS
PNAs POLYNUCLEAR AROMATIC COMPOUNDS
MDL METHOD DETECTION LIMIT
VISLs VAPOR INTRUSION SCREENING LEVELS
UNITs µg/Kg (UNLESS NOTED)
VALUE EXCEEDS APPLICABLE CRITERIA
NOTES: REFER TO TABLES FOR SPECIFIC COMPOUNDS ANALYZED
GROUNDWATER FLOW DIRECTION
GROUNDWATER PLUME
N
PM ENVIRONMENTAL
Environmental & Engineering Services
FIGURE 4
SOIL BORING/TEMPORARY MONITORING WELL/SOIL GAS SAMPLE LOCATION MAP WITH GROUNDWATER ANALYTICAL RESULTS
PROJ:
MEDICAL CENTER COURT APARTMENTS
1005 MAIDEN LANE
ANN ARBOR, MI
THIS IS NOT A LEGAL SURVEY
VERIFY SCALE
0 100'
IF NOT 1" ON THIS SHEET, ADJUST SCALES ACCORDINGLY.
DRN BY: ES/CS
DATE: 11/10/2015
CHKD BY: KW/AS
SCALE: 1" = 100'
FILE NAME: 01-5623-0-007F04R00

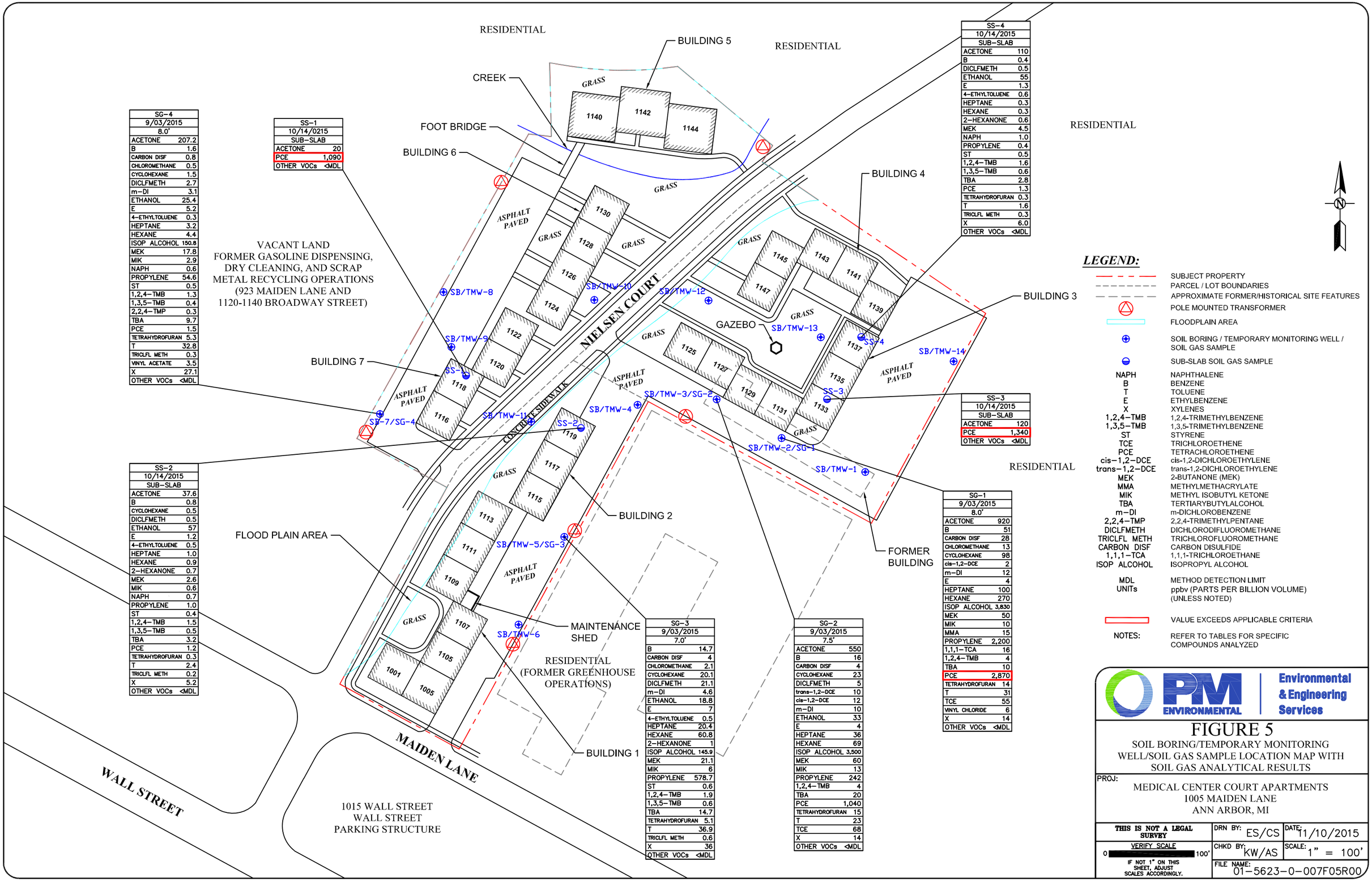


| SG-4 | |
|---|---|
| 9/03/2015 | |
| 8.0' | |
| ACETONE | 207.2 |
| B | 1.6 |
| CARBON DISF | 0.8 |
| CHLOROMETHANE | 0.5 |
| CYCLOHEXANE | 1.5 |
| DICLFMETH | 2.7 |
| m-DI | 3.1 |
| ETHANOL | 25.4 |
| E | 5.2 |
| 4-ETHYLTOLUENE | 0.3 |
| HEPTANE | 3.2 |
| HEXANE | 4.4 |
| ISOP ALCOHOL | 150.8 |
| MEK | 17.8 |
| MIK | 2.9 |
| NAPH | 0.6 |
| PROPYLENE | 54.6 |
| ST | 0.5 |
| 1,2,4-TMB | 1.3 |
| 1,3,5-TMB | 0.4 |
| 2,2,4-TMP | 0.3 |
| TBA | 9.7 |
| PCE | 1.5 |
| TETRAHYDROFURAN | 5.3 |
| T | 32.8 |
| TRICLFL METH | 0.3 |
| VINYL ACETATE | 3.5 |
| X | 27.1 |
| OTHER VOCs | <MDL |

| SS-1 | |
|---|---|
| 10/14/0215 | |
| SUB-SLAB | |
| ACETONE | 20 |
| PCE | 1,090 |
| OTHER VOCs | <MDL |

| SS-4 | |
|---|---|
| 10/14/2015 | |
| SUB-SLAB | |
| ACETONE | 110 |
| B | 0.4 |
| DICLFMETH | 0.5 |
| ETHANOL | 55 |
| E | 1.3 |
| 4-ETHYLTOLUENE | 0.6 |
| HEPTANE | 0.3 |
| HEXANE | 0.3 |
| 2-HEXANONE | 0.6 |
| MEK | 4.5 |
| NAPH | 1.0 |
| PROPYLENE | 0.4 |
| ST | 0.5 |
| 1,2,4-TMB | 1.6 |
| 1,3,5-TMB | 0.6 |
| TBA | 2.8 |
| PCE | 1.3 |
| TETRAHYDROFURAN | 0.3 |
| T | 1.6 |
| TRICLFL METH | 0.3 |
| X | 6.0 |
| OTHER VOCs | <MDL |

| SS-3 | |
|---|---|
| 10/14/2015 | |
| SUB-SLAB | |
| ACETONE | 120 |
| PCE | 1,340 |
| OTHER VOCs | <MDL |

| SS-2 | |
|---|---|
| 10/14/2015 | |
| SUB-SLAB | |
| ACETONE | 37.6 |
| B | 0.8 |
| CYCLOHEXANE | 0.5 |
| DICLFMETH | 0.5 |
| ETHANOL | 57 |
| E | 1.2 |
| 4-ETHYLTOLUENE | 0.5 |
| HEPTANE | 1.0 |
| HEXANE | 0.9 |
| 2-HEXANONE | 0.7 |
| MEK | 2.6 |
| MIK | 0.6 |
| NAPH | 0.7 |
| PROPYLENE | 1.0 |
| ST | 0.4 |
| 1,2,4-TMB | 1.5 |
| 1,3,5-TMB | 0.5 |
| TBA | 3.2 |
| PCE | 1.2 |
| TETRAHYDROFURAN | 0.3 |
| T | 2.4 |
| TRICLFL METH | 0.2 |
| X | 5.2 |
| OTHER VOCs | <MDL |

| SG-1 | |
|---|---|
| 9/03/2015 | |
| 8.0' | |
| ACETONE | 920 |
| B | 51 |
| CARBON DISF | 28 |
| CHLOROMETHANE | 13 |
| CYCLOHEXANE | 98 |
| cis-1,2-DCE | 2 |
| m-DI | 12 |
| E | 4 |
| HEPTANE | 100 |
| HEXANE | 270 |
| ISOP ALCOHOL | 3,830 |
| MEK | 50 |
| MIK | 10 |
| MMA | 15 |
| PROPYLENE | 2,200 |
| 1,1,1-TCA | 16 |
| 1,2,4-TMB | 4 |
| TBA | 10 |
| PCE | 2,870 |
| TETRAHYDROFURAN | 14 |
| T | 31 |
| TCE | 55 |
| VINYL CHLORIDE | 6 |
| X | 14 |
| OTHER VOCs | <MDL |

| SG-3 | |
|---|---|
| 9/03/2015 | |
| 7.0' | |
| B | 14.7 |
| CARBON DISF | 4 |
| CHLOROMETHANE | 2.1 |
| CYCLOHEXANE | 20.1 |
| DICLFMETH | 21.1 |
| m-DI | 4.6 |
| ETHANOL | 18.8 |
| E | 7 |
| 4-ETHYLTOLUENE | 0.5 |
| HEPTANE | 20.4 |
| HEXANE | 60.8 |
| 2-HEXANONE | 1 |
| ISOP ALCOHOL | 145.9 |
| MEK | 21.1 |
| MIK | 6 |
| PROPYLENE | 578.7 |
| ST | 0.6 |
| 1,2,4-TMB | 1.9 |
| 1,3,5-TMB | 0.6 |
| TBA | 14.7 |
| TETRAHYDROFURAN | 5.1 |
| T | 36.9 |
| TRICLFL METH | 0.6 |
| X | 36 |
| OTHER VOCs | <MDL |

| SG-2 | |
|---|---|
| 9/03/2015 | |
| 7.5' | |
| ACETONE | 550 |
| B | 16 |
| CARBON DISF | 4 |
| CYCLOHEXANE | 23 |
| DICLFMETH | 5 |
| trans-1,2-DCE | 10 |
| cis-1,2-DCE | 12 |
| m-DI | 10 |
| ETHANOL | 33 |
| E | 4 |
| HEPTANE | 36 |
| HEXANE | 69 |
| ISOP ALCOHOL | 3,500 |
| MEK | 60 |
| MIK | 13 |
| PROPYLENE | 242 |
| 1,2,4-TMB | 4 |
| TBA | 20 |
| PCE | 1,040 |
| TETRAHYDROFURAN | 15 |
| T | 23 |
| TCE | 68 |
| X | 14 |
| OTHER VOCs | <MDL |

# FIGURE 5

SOIL BORING/TEMPORARY MONITORING WELL/SOIL GAS SAMPLE LOCATION MAP WITH SOIL GAS ANALYTICAL RESULTS

PROJ: MEDICAL CENTER COURT APARTMENTS
1005 MAIDEN LANE
ANN ARBOR, MI

| | | |
|---|---|---|
| THIS IS NOT A LEGAL SURVEY | DRN BY: ES/CS | DATE: 11/10/2015 |
| VERIFY SCALE 0 100' IF NOT 1" ON THIS SHEET, ADJUST SCALES ACCORDINGLY. | CHKD BY: KW/AS | SCALE: 1" = 100' |
| | FILE NAME: 01-5623-0-007F05R00 | |

| IA-5 | |
|---|---|
| 9/24/2015 | |
| ACETONE | 12.6 |
| B | 0.38 |
| CHLOROMETHANE | 0.85 |
| CARBON TCHL | 0.099 |
| CYCLOHEXANE | 0.15 |
| DICLFMETH | 0.62 |
| ETHANOL | 222 |
| E | 0.15 |
| EA | 3.9 |
| HEPTANE | 0.17 |
| HEXANE | 0.48 |
| ISOP ALCOHOL | 52 |
| METH CHLR | 0.29 |
| MEK | 0.54 |
| PROPYLENE | 8.0 |
| 1,2,4-TMB | 0.23 |
| 2,2,4-TMP | 0.14 |
| TBA | 0.24 |
| PCE | 0.11 |
| T | 1.2 |
| TRICLFL METH | 0.32 |
| X | 0.57 |
| OTHER VOCs | <MDL |

| IA-6 | |
|---|---|
| 9/24/2015 | |
| ACETONE | 11.9 |
| B | 0.33 |
| Chl | 0.1 |
| CHLOROMETHANE | 0.74 |
| CARBON TCHL | 0.089 |
| CYCLOHEXANE | 0.11 |
| 1,2-DCA | 0.16 |
| DICLFMETH | 0.6 |
| ETHANOL | 80.5 |
| E | 0.14 |
| EA | 5.5 |
| HEPTANE | 0.13 |
| HEXANE | 0.36 |
| ISOP ALCOHOL | 6.1 |
| METH CHLR | 0.25 |
| MEK | 0.48 |
| MIK | 0.14 |
| PROPYLENE | 12.6 |
| ST | 0.11 |
| 1,2,4-TMB | 0.13 |
| 2,2,4-TMP | 0.13 |
| PCE | 0.35 |
| T | 1.5 |
| TRICLFL METH | 0.33 |
| X | 0.56 |
| OTHER VOCs | <MDL |

| IA-7 | |
|---|---|
| 9/24/2015 | |
| ACETONE | 11.4 |
| B | 0.34 |
| Chl | 0.15 |
| CHLOROMETHANE | 0.83 |
| CARBON TCHL | 0.13 |
| CYCLOHEXANE | 0.15 |
| DICLFMETH | 0.64 |
| ETHANOL | 128 |
| E | 0.13 |
| EA | 4.2 |
| HEPTANE | 0.14 |
| HEXANE | 2.3 |
| ISOP ALCOHOL | 2.8 |
| METH CHLR | 11.2 |
| MEK | 0.43 |
| PROPYLENE | 6.3 |
| 1,2,4-TMB | 0.12 |
| 2,2,4-TMP | 0.12 |
| PCE | 0.1 |
| T | 1 |
| TRICLFL METH | 0.43 |
| X | 0.54 |
| OTHER VOCs | <MDL |

| IA-8 | |
|---|---|
| 9/24/2015 | |
| ACETONE | 11.3 |
| B | 0.31 |
| CHLOROMETHANE | 0.5 |
| DICLFMETH | 0.6 |
| ETHANOL | 37 |
| E | 0.13 |
| EA | 5.5 |
| HEPTANE | 0.11 |
| HEXANE | 0.5 |
| ISOP ALCOHOL | 2.2 |
| METH CHLR | 1 |
| MEK | 0.49 |
| PROPYLENE | 8 |
| 1,2,4-TMB | 0.11 |
| 2,2,4-TMP | 0.11 |
| PCE | 0.28 |
| T | 1 |
| TRICLFL METH | 0.32 |
| X | 0.55 |
| OTHER VOCs | <MDL |

| IA-4 | |
|---|---|
| 9/24/2015 | |
| ACETONE | 13.4 |
| B | 0.34 |
| CHLOROMETHANE | 0.62 |
| CARBON TCHL | 0.099 |
| CYCLOHEXANE | 0.1 |
| DICLFMETH | 0.64 |
| ETHANOL | 112 |
| E | 0.2 |
| EA | 3.4 |
| 4-ETHYLTOLUENE | 0.18 |
| HEPTANE | 0.62 |
| HEXANE | 0.35 |
| ISOP ALCOHOL | 3.1 |
| METH CHLR | 0.26 |
| MEK | 0.52 |
| PROPYLENE | 7.4 |
| 1,2,4-TMB | 0.59 |
| 1,3,5-TMB | 0.21 |
| 2,2,4-TMP | 0.12 |
| TBA | 0.18 |
| PCE | 0.099 |
| T | 1.1 |
| TRICLFL METH | 0.32 |
| X | 0.8 |
| OTHER VOCs | <MDL |

| IA-3 | |
|---|---|
| 9/24/2015 | |
| ACETONE | 14.5 |
| B | 0.42 |
| CARBON DISF | 0.32 |
| Chl | 0.11 |
| CHLOROMETHANE | 0.56 |
| CARBON TCHL | 0.1 |
| CYCLOHEXANE | 0.25 |
| DICLFMETH | 0.6 |
| ETHANOL | 128 |
| E | 0.49 |
| EA | 11.2 |
| HEPTANE | 77.3 |
| HEXANE | 0.41 |
| ISOP ALCOHOL | 3.6 |
| METH CHLR | 0.28 |
| MEK | 0.69 |
| NAPH | 0.19 |
| ST | 0.1 |
| 1,2,4-TMB | 0.17 |
| 2,2,4-TMP | 0.96 |
| PCE | 0.11 |
| T | 2.0 |
| TRICLFL METH | 0.31 |
| X | 2.0 |
| OTHER VOCs | <MDL |

| IA-1 | |
|---|---|
| 9/24/2015 | |
| ACETONE | 9.9 |
| B | 0.32 |
| CHLOROMETHANE | 0.66 |
| DICLFMETH | 0.59 |
| ETHANOL | 90.7 |
| E | 0.13 |
| EA | 6.2 |
| HEPTANE | 0.2 |
| HEXANE | 0.38 |
| ISOP ALCOHOL | 2.7 |
| METH CHLR | 0.3 |
| MEK | 0.46 |
| PROPYLENE | 8.8 |
| 1,2,4-TMB | 0.15 |
| 2,2,4-TMP | 0.11 |
| PCE | 0.076 |
| T | 1.3 |
| TRICLFL METH | 0.29 |
| X | 0.46 |
| OTHER VOCs | <MDL |

| IA-2 | |
|---|---|
| 9/24/2015 | |
| ACETONE | 14.4 |
| B | 0.42 |
| Chl | 0.14 |
| CHLOROMETHANE | 0.85 |
| CARBON TCHL | 0.099 |
| CYCLOHEXANE | 0.14 |
| 1,2-DCA | 0.13 |
| DICLFMETH | 0.64 |
| ETHANOL | 115 |
| E | 0.29 |
| EA | 9.8 |
| HEPTANE | 0.92 |
| HEXANE | 0.48 |
| ISOP ALCOHOL | 7.9 |
| METH CHLR | 0.47 |
| MEK | 0.7 |
| PROPYLENE | 11.4 |
| ST | 0.13 |
| 1,2,4-TMB | 0.19 |
| 2,2,4-TMP | 0.16 |
| PCE | 0.16 |
| T | 1.8 |
| TCE | 0.039 |
| TRICLFL METH | 0.41 |
| X | 0.86 |
| OTHER VOCs | <MDL |

| IA-9 | |
|---|---|
| 9/24/2015 | |
| ACETONE | 11.1 |
| B | 0.34 |
| CHLOROMETHANE | 0.46 |
| CARBON TCHL | 0.096 |
| CYCLOHEXANE | 0.12 |
| DICLFMETH | 0.62 |
| ETHANOL | 143 |
| E | 0.14 |
| EA | 6.7 |
| HEPTANE | 0.25 |
| HEXANE | 0.4 |
| ISOP ALCOHOL | 3.1 |
| METH CHLR | 0.31 |
| MEK | 0.49 |
| PROPYLENE | 9.3 |
| 1,2,4-TMB | 0.13 |
| 2,2,4-TMP | 0.13 |
| TBA | 0.27 |
| PCE | 0.19 |
| T | 1.2 |
| TRICLFL METH | 0.3 |
| X | 0.61 |
| OTHER VOCs | <MDL |

| IA-10 | |
|---|---|
| 9/24/2015 | |
| ACETONE | 30.8 |
| B | 0.32 |
| CHLOROMETHANE | 0.53 |
| DICLFMETH | 0.6 |
| ETHANOL | 93.1 |
| E | 0.19 |
| EA | 4.4 |
| HEPTANE | 0.19 |
| HEXANE | 0.34 |
| 2-HEXANONE | 0.12 |
| ISOP ALCOHOL | 4.3 |
| METH CHLR | 0.29 |
| MEK | 1 |
| MIK | 0.14 |
| NAPH | 0.48 |
| PROPYLENE | 7.3 |
| 1,2,4-TMB | 0.14 |
| 2,2,4-TMP | 0.11 |
| TBA | 0.23 |
| PCE | 0.21 |
| T | 1.1 |
| TRICLFL METH | 0.33 |
| X | 0.97 |
| OTHER VOCs | <MDL |

## LEGEND:

| | |
|---|---|
| | SUBJECT PROPERTY |
| | APPROXIMATE FORMER/HISTORICAL SITE FEATURES |
| | POLE MOUNTED TRANSFORMER |
| | INDOOR AIR SAMPLE |
| B | BENZENE |
| T | TOLUENE |
| E | ETHYLBENZENE |
| X | XYLENES |
| 1,2,4-TMB | 1,2,4-TRIMETHYLBENZENE |
| 1,3,5-TMB | 1,3,5-TRIMETHYLBENZENE |
| 2,2,4-TMP | 2,2,4-TRIMETHYLPENTANE |
| 1,2-DCA | 1,2-DICHLOROETHANE |
| NAPH | NAPHTHALENE |
| Chl | CHLOROFORM |
| ST | STYRENE |
| TCE | TRICHLOROETHENE |
| PCE | TETRACHLOROETHENE |
| MEK | 2-BUTANONE (MEK) |
| MIK | METHYL ISOBUTYL KETONE |
| EA | ETHYL ACETATE |
| TBA | TERTIARYBUTYLALCOHOL |
| m-DCB | m-DICHLOROBENZENE |
| p-DCB | p-DICHLOROBENZENE |
| METH CHLR | METHYLENE CHLORIDE |
| ISOP ALCOHOL | ISOPROPYL ALCOHOL |
| CARBON TCHL | CARBON TETRACHLORIDE |
| DICLFMETH | DICHLORODIFLUOROMETHANE |
| TRICLFL METH | TRICHLOROFLUOROMETHANE |
| CARBON DISF | CARBON DISULFIDE |
| VOCs | VOLATILE ORGANIC COMPOUNDS |
| MDL | METHOD DETECTION LIMIT |
| UNITs | µg/Kg (UNLESS NOTED) |
| | VALUE EXCEEDS APPLICABLE CRITERIA |

NOTES: REFER TO TABLES FOR SPECIFIC COMPOUNDS ANALYZED

PM ENVIRONMENTAL | Environmental & Engineering Services

# FIGURE 6A

INDOOR AIR SAMPLE LOCATION MAP WITH INDOOR AIR SAMPLE ANALYTICAL RESULTS - SOUTHERN APARTMENT COMPLEX

PROJ:
MEDICAL CENTER COURT APARTMENTS
1005 MAIDEN LANE
ANN ARBOR, MI

THIS IS NOT A LEGAL SURVEY

VERIFY SCALE
0 100'
IF NOT 1" ON THIS SHEET, ADJUST SCALES ACCORDINGLY.

DRN BY: ES
DATE: 11/3/2015
CHKD BY: AS
SCALE: 1" = 100'
FILE NAME: 01-5623-0-007F00R00

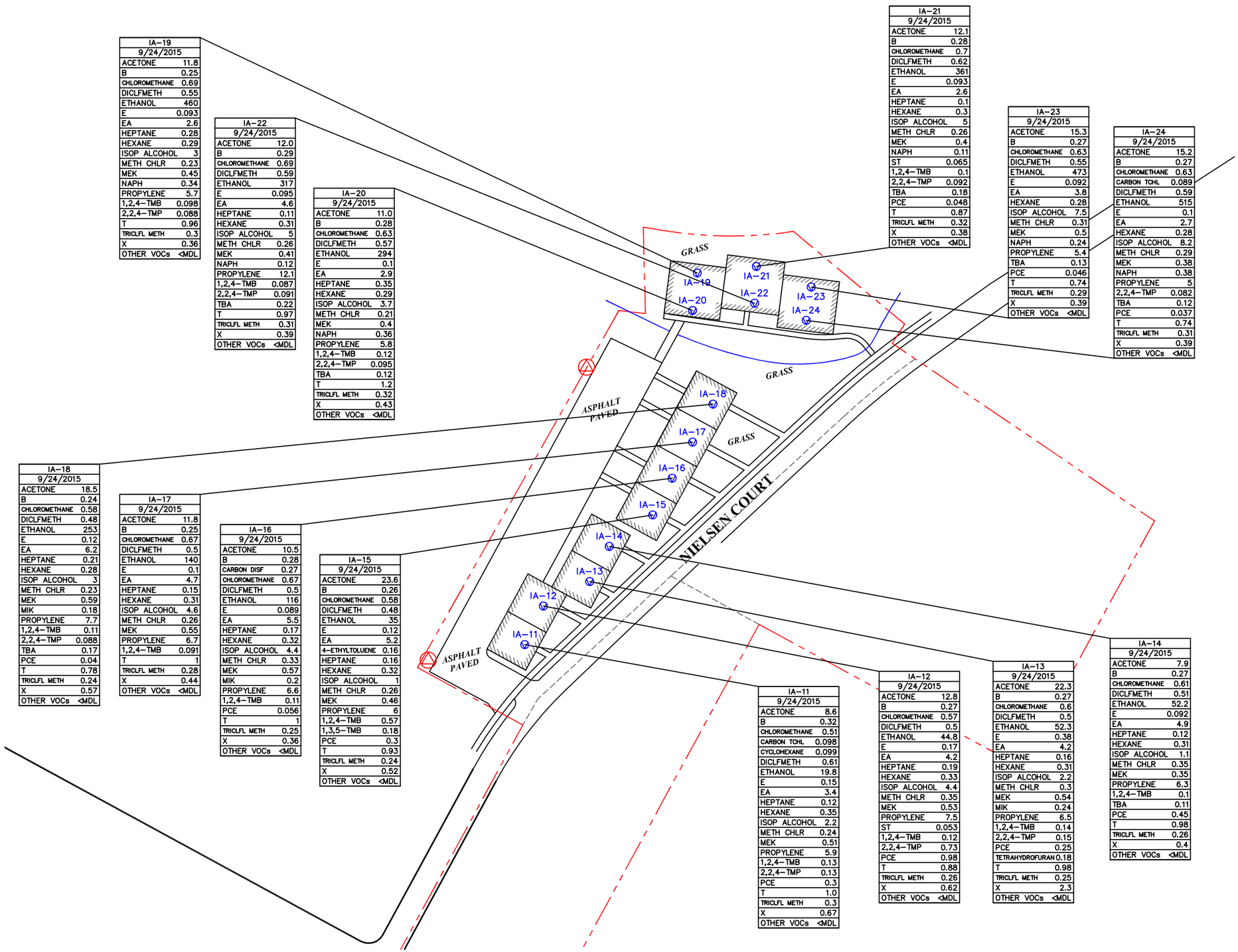


| IA-19 | |
|---|---|
| 9/24/2015 | |
| ACETONE | 11.8 |
| B | 0.25 |
| CHLOROMETHANE | 0.69 |
| DICLFMETH | 0.55 |
| ETHANOL | 460 |
| E | 0.093 |
| EA | 2.6 |
| HEPTANE | 0.28 |
| HEXANE | 0.29 |
| ISOP ALCOHOL | 3 |
| METH CHLR | 0.23 |
| MEK | 0.45 |
| NAPH | 0.34 |
| PROPYLENE | 5.7 |
| 1,2,4-TMB | 0.098 |
| 2,2,4-TMP | 0.088 |
| T | 0.96 |
| TRICLFL METH | 0.3 |
| X | 0.36 |
| OTHER VOCs | <MDL |

| IA-22 | |
|---|---|
| 9/24/2015 | |
| ACETONE | 12.0 |
| B | 0.29 |
| CHLOROMETHANE | 0.69 |
| DICLFMETH | 0.59 |
| ETHANOL | 317 |
| E | 0.095 |
| EA | 4.6 |
| HEPTANE | 0.11 |
| HEXANE | 0.31 |
| ISOP ALCOHOL | 5 |
| METH CHLR | 0.26 |
| MEK | 0.41 |
| NAPH | 0.12 |
| PROPYLENE | 12.1 |
| 1,2,4-TMB | 0.087 |
| 2,2,4-TMP | 0.091 |
| TBA | 0.22 |
| T | 0.97 |
| TRICLFL METH | 0.31 |
| X | 0.39 |
| OTHER VOCs | <MDL |

| IA-20 | |
|---|---|
| 9/24/2015 | |
| ACETONE | 11.0 |
| B | 0.28 |
| CHLOROMETHANE | 0.63 |
| DICLFMETH | 0.57 |
| ETHANOL | 294 |
| E | 0.1 |
| EA | 2.9 |
| HEPTANE | 0.35 |
| HEXANE | 0.29 |
| ISOP ALCOHOL | 3.7 |
| METH CHLR | 0.21 |
| MEK | 0.4 |
| NAPH | 0.36 |
| PROPYLENE | 5.8 |
| 1,2,4-TMB | 0.12 |
| 2,2,4-TMP | 0.095 |
| TBA | 0.12 |
| T | 1.2 |
| TRICLFL METH | 0.32 |
| X | 0.43 |
| OTHER VOCs | <MDL |

| IA-21 | |
|---|---|
| 9/24/2015 | |
| ACETONE | 12.1 |
| B | 0.28 |
| CHLOROMETHANE | 0.7 |
| DICLFMETH | 0.62 |
| ETHANOL | 361 |
| E | 0.093 |
| EA | 2.6 |
| HEPTANE | 0.1 |
| HEXANE | 0.3 |
| ISOP ALCOHOL | 5 |
| METH CHLR | 0.26 |
| MEK | 0.4 |
| NAPH | 0.11 |
| ST | 0.065 |
| 1,2,4-TMB | 0.1 |
| 2,2,4-TMP | 0.092 |
| TBA | 0.18 |
| PCE | 0.048 |
| T | 0.87 |
| TRICLFL METH | 0.32 |
| X | 0.38 |
| OTHER VOCs | <MDL |

| IA-23 | |
|---|---|
| 9/24/2015 | |
| ACETONE | 15.3 |
| B | 0.27 |
| CHLOROMETHANE | 0.63 |
| DICLFMETH | 0.55 |
| ETHANOL | 473 |
| E | 0.092 |
| EA | 3.8 |
| HEXANE | 0.28 |
| ISOP ALCOHOL | 7.5 |
| METH CHLR | 0.31 |
| MEK | 0.5 |
| NAPH | 0.24 |
| PROPYLENE | 5.4 |
| TBA | 0.13 |
| PCE | 0.046 |
| T | 0.74 |
| TRICLFL METH | 0.29 |
| X | 0.39 |
| OTHER VOCs | <MDL |

| IA-24 | |
|---|---|
| 9/24/2015 | |
| ACETONE | 15.2 |
| B | 0.27 |
| CHLOROMETHANE | 0.63 |
| CARBON TCHL | 0.089 |
| DICLFMETH | 0.59 |
| ETHANOL | 515 |
| E | 0.1 |
| EA | 2.7 |
| HEXANE | 0.28 |
| ISOP ALCOHOL | 8.2 |
| METH CHLR | 0.29 |
| MEK | 0.38 |
| NAPH | 0.38 |
| PROPYLENE | 5 |
| 2,2,4-TMP | 0.082 |
| TBA | 0.12 |
| PCE | 0.037 |
| T | 0.74 |
| TRICLFL METH | 0.31 |
| X | 0.39 |
| OTHER VOCs | <MDL |

| IA-18 | |
|---|---|
| 9/24/2015 | |
| ACETONE | 18.5 |
| B | 0.24 |
| CHLOROMETHANE | 0.58 |
| DICLFMETH | 0.48 |
| ETHANOL | 253 |
| E | 0.12 |
| EA | 6.2 |
| HEPTANE | 0.21 |
| HEXANE | 0.28 |
| ISOP ALCOHOL | 3 |
| METH CHLR | 0.23 |
| MEK | 0.59 |
| MIK | 0.18 |
| PROPYLENE | 7.7 |
| 1,2,4-TMB | 0.11 |
| 2,2,4-TMP | 0.088 |
| TBA | 0.17 |
| PCE | 0.04 |
| T | 0.78 |
| TRICLFL METH | 0.24 |
| X | 0.57 |
| OTHER VOCs | <MDL |

| IA-17 | |
|---|---|
| 9/24/2015 | |
| ACETONE | 11.8 |
| B | 0.25 |
| CHLOROMETHANE | 0.67 |
| DICLFMETH | 0.5 |
| ETHANOL | 140 |
| E | 0.1 |
| EA | 4.7 |
| HEPTANE | 0.15 |
| HEXANE | 0.31 |
| ISOP ALCOHOL | 4.6 |
| METH CHLR | 0.26 |
| MEK | 0.55 |
| PROPYLENE | 6.7 |
| 1,2,4-TMB | 0.091 |
| T | 1 |
| TRICLFL METH | 0.28 |
| X | 0.44 |
| OTHER VOCs | <MDL |

| IA-16 | |
|---|---|
| 9/24/2015 | |
| ACETONE | 10.5 |
| B | 0.28 |
| CARBON DISF | 0.27 |
| CHLOROMETHANE | 0.67 |
| DICLFMETH | 0.5 |
| ETHANOL | 116 |
| E | 0.089 |
| EA | 5.5 |
| HEPTANE | 0.17 |
| HEXANE | 0.32 |
| ISOP ALCOHOL | 4.4 |
| METH CHLR | 0.33 |
| MEK | 0.57 |
| MIK | 0.2 |
| PROPYLENE | 6.6 |
| 1,2,4-TMB | 0.11 |
| PCE | 0.056 |
| T | 1 |
| TRICLFL METH | 0.25 |
| X | 0.36 |
| OTHER VOCs | <MDL |

| IA-15 | |
|---|---|
| 9/24/2015 | |
| ACETONE | 23.6 |
| B | 0.26 |
| CHLOROMETHANE | 0.58 |
| DICLFMETH | 0.48 |
| ETHANOL | 35 |
| E | 0.12 |
| EA | 5.2 |
| 4-ETHYLTOLUENE | 0.16 |
| HEPTANE | 0.16 |
| HEXANE | 0.32 |
| ISOP ALCOHOL | 1 |
| METH CHLR | 0.26 |
| MEK | 0.46 |
| PROPYLENE | 6 |
| 1,2,4-TMB | 0.57 |
| 1,3,5-TMB | 0.18 |
| PCE | 0.3 |
| T | 0.93 |
| TRICLFL METH | 0.24 |
| X | 0.52 |
| OTHER VOCs | <MDL |

| IA-11 | |
|---|---|
| 9/24/2015 | |
| ACETONE | 8.6 |
| B | 0.32 |
| CHLOROMETHANE | 0.51 |
| CARBON TCHL | 0.098 |
| CYCLOHEXANE | 0.099 |
| DICLFMETH | 0.61 |
| ETHANOL | 19.8 |
| E | 0.15 |
| EA | 3.4 |
| HEPTANE | 0.12 |
| HEXANE | 0.35 |
| ISOP ALCOHOL | 2.2 |
| METH CHLR | 0.24 |
| MEK | 0.51 |
| PROPYLENE | 5.9 |
| 1,2,4-TMB | 0.13 |
| 2,2,4-TMP | 0.13 |
| PCE | 0.3 |
| T | 1.0 |
| TRICLFL METH | 0.3 |
| X | 0.67 |
| OTHER VOCs | <MDL |

| IA-12 | |
|---|---|
| 9/24/2015 | |
| ACETONE | 12.8 |
| B | 0.27 |
| CHLOROMETHANE | 0.57 |
| DICLFMETH | 0.5 |
| ETHANOL | 44.8 |
| E | 0.17 |
| EA | 4.2 |
| HEPTANE | 0.19 |
| HEXANE | 0.33 |
| ISOP ALCOHOL | 4.4 |
| METH CHLR | 0.35 |
| MEK | 0.53 |
| PROPYLENE | 7.5 |
| ST | 0.053 |
| 1,2,4-TMB | 0.12 |
| 2,2,4-TMP | 0.73 |
| PCE | 0.98 |
| T | 0.88 |
| TRICLFL METH | 0.26 |
| X | 0.62 |
| OTHER VOCs | <MDL |

| IA-13 | |
|---|---|
| 9/24/2015 | |
| ACETONE | 22.3 |
| B | 0.27 |
| CHLOROMETHANE | 0.6 |
| DICLFMETH | 0.5 |
| ETHANOL | 52.3 |
| E | 0.38 |
| EA | 4.2 |
| HEPTANE | 0.16 |
| HEXANE | 0.31 |
| ISOP ALCOHOL | 2.2 |
| METH CHLR | 0.3 |
| MEK | 0.54 |
| MIK | 0.24 |
| PROPYLENE | 6.5 |
| 1,2,4-TMB | 0.14 |
| 2,2,4-TMP | 0.15 |
| PCE | 0.25 |
| TETRAHYDROFURAN | 0.18 |
| T | 0.98 |
| TRICLFL METH | 0.25 |
| X | 2.3 |
| OTHER VOCs | <MDL |

| IA-14 | |
|---|---|
| 9/24/2015 | |
| ACETONE | 7.9 |
| B | 0.27 |
| CHLOROMETHANE | 0.61 |
| DICLFMETH | 0.51 |
| ETHANOL | 52.2 |
| E | 0.092 |
| EA | 4.9 |
| HEPTANE | 0.12 |
| HEXANE | 0.31 |
| ISOP ALCOHOL | 1.1 |
| METH CHLR | 0.35 |
| MEK | 0.35 |
| PROPYLENE | 6.3 |
| 1,2,4-TMB | 0.1 |
| TBA | 0.11 |
| PCE | 0.45 |
| T | 0.98 |
| TRICLFL METH | 0.26 |
| X | 0.4 |
| OTHER VOCs | <MDL |

## LEGEND:

| | |
|---|---|
| | SUBJECT PROPERTY |
| | APPROXIMATE FORMER/HISTORICAL SITE FEATURES |
| | POLE MOUNTED TRANSFORMER |
| | INDOOR AIR SAMPLE |
| B | BENZENE |
| T | TOLUENE |
| E | ETHYLBENZENE |
| X | XYLENES |
| 1,2,4-TMB | 1,2,4-TRIMETHYLBENZENE |
| 1,3,5-TMB | 1,3,5-TRIMETHYLBENZENE |
| 2,2,4-TMP | 2,2,4-TRIMETHYLPENTANE |
| 1,2-DCA | 1,2-DICHLOROETHANE |
| NAPH | NAPHTHALENE |
| Chl | CHLOROFORM |
| ST | STYRENE |
| TCE | TRICHLOROETHENE |
| PCE | TETRACHLOROETHENE |
| MEK | 2-BUTANONE (MEK) |
| MIK | METHYL ISOBUTYL KETONE |
| EA | ETHYL ACETATE |
| TBA | TERTIARYBUTYLALCOHOL |
| m-DCB | m-DICHLOROBENZENE |
| p-DCB | p-DICHLOROBENZENE |
| METH CHLR | METHYLENE CHLORIDE |
| ISOP ALCOHOL | ISOPROPYL ALCOHOL |
| CARBON TCHL | CARBON TETRACHLORIDE |
| DICLFMETH | DICHLORODIFLUOROMETHANE |
| TRICLFL METH | TRICHLOROFLUOROMETHANE |
| CARBON DISF | CARBON DISULFIDE |
| VOCs | VOLATILE ORGANIC COMPOUNDS |
| MDL | METHOD DETECTION LIMIT |
| UNITs | µg/Kg (UNLESS NOTED) |
| | VALUE EXCEEDS APPLICABLE CRITERIA |
| NOTES: | REFER TO TABLES FOR SPECIFIC COMPOUNDS ANALYZED |

PM ENVIRONMENTAL | Environmental & Engineering Services

# FIGURE 6B

INDOOR AIR SAMPLE LOCATION MAP WITH INDOOR AIR SAMPLE ANALYTICAL RESULTS - WESTERN APARTMENT COMPLEX

PROJ:

MEDICAL CENTER COURT APARTMENTS
1005 MAIDEN LANE
ANN ARBOR, MI

| | | |
|---|---|---|
| THIS IS NOT A LEGAL SURVEY | DRN BY: ES | DATE: 11/3/2015 |
| VERIFY SCALE 0 100' IF NOT 1" ON THIS SHEET, ADJUST SCALES ACCORDINGLY. | CHKD BY: AS | SCALE: 1" = 100' |
| | FILE NAME: 01-5623-0-007F00R00 | |

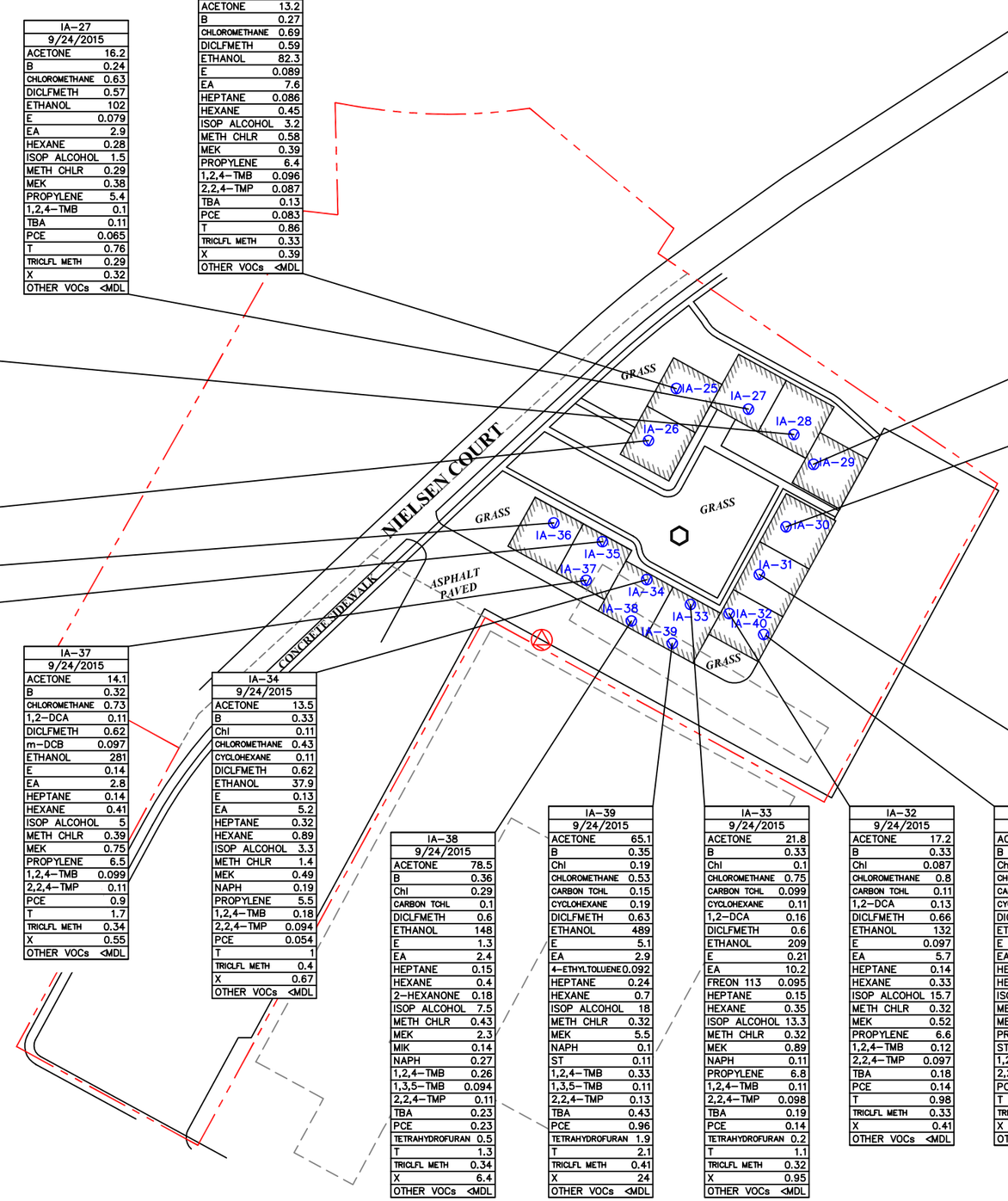


| IA-26 | |
|---|---|
| 9/24/2015 | |
| ACETONE | 30.2 |
| B | 0.3 |
| CHLOROMETHANE | 0.72 |
| CARBON TCHL | 0.089 |
| CYCLOHEXANE | 0.089 |
| DICLFMETH | 0.57 |
| ETHANOL | 156 |
| E | 0.1 |
| EA | 6.6 |
| HEPTANE | 0.14 |
| HEXANE | 0.33 |
| ISOP ALCOHOL | 6.4 |
| METH CHLR | 0.25 |
| MEK | 0.96 |
| PROPYLENE | 5.5 |
| 1,2,4-TMB | 0.11 |
| 2,2,4-TMP | 0.097 |
| TBA | 0.32 |
| PCE | 0.039 |
| T | 0.96 |
| TRICLFL METH | 0.3 |
| X | 0.44 |
| OTHER VOCs | <MDL |

| IA-28 | |
|---|---|
| 9/24/2015 | |
| ACETONE | 49 |
| B | 0.29 |
| CHLOROMETHANE | 0.72 |
| CYCLOHEXANE | 0.096 |
| DICLFMETH | 0.57 |
| ETHANOL | 129 |
| E | 0.11 |
| EA | 4.3 |
| HEPTANE | 0.11 |
| HEXANE | 0.35 |
| 2-HEXANONE | 0.11 |
| ISOP ALCOHOL | 2 |
| METH CHLR | 0.35 |
| MEK | 1.4 |
| MIK | 0.19 |
| PROPYLENE | 8 |
| 1,2,4-TMB | 0.26 |
| 2,2,4-TMP | 0.096 |
| TBA | 0.46 |
| PCE | 0.037 |
| T | 0.78 |
| TRICLFL METH | 0.3 |
| X | 0.55 |
| OTHER VOCs | <MDL |

| IA-27 | |
|---|---|
| 9/24/2015 | |
| ACETONE | 16.2 |
| B | 0.24 |
| CHLOROMETHANE | 0.63 |
| DICLFMETH | 0.57 |
| ETHANOL | 102 |
| E | 0.079 |
| EA | 2.9 |
| HEXANE | 0.28 |
| ISOP ALCOHOL | 1.5 |
| METH CHLR | 0.29 |
| MEK | 0.38 |
| PROPYLENE | 5.4 |
| 1,2,4-TMB | 0.1 |
| TBA | 0.11 |
| PCE | 0.065 |
| T | 0.76 |
| TRICLFL METH | 0.29 |
| X | 0.32 |
| OTHER VOCs | <MDL |

| IA-25 | |
|---|---|
| 9/24/2015 | |
| ACETONE | 13.2 |
| B | 0.27 |
| CHLOROMETHANE | 0.69 |
| DICLFMETH | 0.59 |
| ETHANOL | 82.3 |
| E | 0.089 |
| EA | 7.6 |
| HEPTANE | 0.086 |
| HEXANE | 0.45 |
| ISOP ALCOHOL | 3.2 |
| METH CHLR | 0.58 |
| MEK | 0.39 |
| PROPYLENE | 6.4 |
| 1,2,4-TMB | 0.096 |
| 2,2,4-TMP | 0.087 |
| TBA | 0.13 |
| PCE | 0.083 |
| T | 0.86 |
| TRICLFL METH | 0.33 |
| X | 0.39 |
| OTHER VOCs | <MDL |

| IA-29 | |
|---|---|
| 9/24/2015 | |
| ACETONE | 13.0 |
| B | 0.27 |
| CHLOROMETHANE | 0.84 |
| CYCLOHEXANE | 0.13 |
| DICLFMETH | 0.61 |
| ETHANOL | 89.5 |
| E | 0.1 |
| EA | 5 |
| HEPTANE | 0.36 |
| HEXANE | 0.29 |
| ISOP ALCOHOL | 1.5 |
| METH CHLR | 0.24 |
| MEK | 0.45 |
| PROPYLENE | 6.7 |
| 1,2,4-TMB | 0.12 |
| 2,2,4-TMP | 0.085 |
| TBA | 0.13 |
| T | 0.99 |
| TRICLFL METH | 0.29 |
| X | 0.46 |
| OTHER VOCs | <MDL |

| IA-30 | |
|---|---|
| 9/24/2015 | |
| ACETONE | 25.4 |
| B | 0.29 |
| CHLOROMETHANE | 0.79 |
| CARBON TCHL | 0.087 |
| CYCLOHEXANE | 0.1 |
| DICLFMETH | 0.58 |
| p-DCB | 0.52 |
| ETHANOL | 96.4 |
| E | 0.2 |
| EA | 16.5 |
| HEPTANE | 0.11 |
| 2-HEXANONE | 0.12 |
| ISOP ALCOHOL | 3.7 |
| METH CHLR | 0.29 |
| MEK | 3.4 |
| MIK | 0.11 |
| PROPYLENE | 6.5 |
| ST | 0.1 |
| 1,2,4-TMB | 0.12 |
| 2,2,4-TMP | 0.096 |
| TBA | 0.18 |
| PCE | 3.7 |
| T | 1.2 |
| TRICLFL METH | 0.32 |
| X | 0.78 |
| OTHER VOCs | <MDL |

| IA-36 | |
|---|---|
| 9/24/2015 | |
| ACETONE | 13.3 |
| B | 0.26 |
| CHLOROMETHANE | 0.72 |
| 1,2-DCA | 0.22 |
| DICLFMETH | 0.62 |
| ETHANOL | 174 |
| E | 0.082 |
| EA | 4.2 |
| HEPTANE | 0.093 |
| HEXANE | 0.34 |
| ISOP ALCOHOL | 5.6 |
| METH CHLR | 0.34 |
| MEK | 0.46 |
| PROPYLENE | 6.6 |
| 1,2,4-TMB | 0.086 |
| 2,2,4-TMP | 0.081 |
| PCE | 0.11 |
| T | 0.73 |
| TRICLFL METH | 0.3 |
| X | 0.37 |
| OTHER VOCs | <MDL |

| IA-35 | |
|---|---|
| 9/24/2015 | |
| ACETONE | 8.4 |
| B | 0.34 |
| CHLOROMETHANE | 0.51 |
| CARBON TCHL | 0.089 |
| DICLFMETH | 0.6 |
| ETHANOL | 240 |
| E | 0.12 |
| EA | 5.9 |
| HEPTANE | 0.13 |
| HEXANE | 0.34 |
| ISOP ALCOHOL | 3.2 |
| METH CHLR | 0.28 |
| MEK | 0.48 |
| NAPH | 0.14 |
| PROPYLENE | 6.4 |
| 1,2,4-TMB | 0.12 |
| 2,2,4-TMP | 0.11 |
| PCE | 0.16 |
| T | 1.3 |
| TRICLFL METH | 0.31 |
| X | 0.47 |
| OTHER VOCs | <MDL |

| IA-37 | |
|---|---|
| 9/24/2015 | |
| ACETONE | 14.1 |
| B | 0.32 |
| CHLOROMETHANE | 0.73 |
| 1,2-DCA | 0.11 |
| DICLFMETH | 0.62 |
| m-DCB | 0.097 |
| ETHANOL | 281 |
| E | 0.14 |
| EA | 2.8 |
| HEPTANE | 0.14 |
| HEXANE | 0.41 |
| ISOP ALCOHOL | 5 |
| METH CHLR | 0.39 |
| MEK | 0.75 |
| PROPYLENE | 6.5 |
| 1,2,4-TMB | 0.099 |
| 2,2,4-TMP | 0.11 |
| PCE | 0.9 |
| T | 1.7 |
| TRICLFL METH | 0.34 |
| X | 0.55 |
| OTHER VOCs | <MDL |

| IA-34 | |
|---|---|
| 9/24/2015 | |
| ACETONE | 13.5 |
| B | 0.33 |
| Chl | 0.11 |
| CHLOROMETHANE | 0.43 |
| CYCLOHEXANE | 0.11 |
| DICLFMETH | 0.62 |
| ETHANOL | 37.9 |
| E | 0.13 |
| EA | 5.2 |
| HEPTANE | 0.32 |
| HEXANE | 0.89 |
| ISOP ALCOHOL | 3.3 |
| METH CHLR | 1.4 |
| MEK | 0.49 |
| NAPH | 0.19 |
| PROPYLENE | 5.5 |
| 1,2,4-TMB | 0.18 |
| 2,2,4-TMP | 0.094 |
| PCE | 0.054 |
| T | 1 |
| TRICLFL METH | 0.4 |
| X | 0.67 |
| OTHER VOCs | <MDL |

| IA-38 | |
|---|---|
| 9/24/2015 | |
| ACETONE | 78.5 |
| B | 0.36 |
| Chl | 0.29 |
| CARBON TCHL | 0.1 |
| DICLFMETH | 0.6 |
| ETHANOL | 148 |
| E | 1.3 |
| EA | 2.4 |
| HEPTANE | 0.15 |
| HEXANE | 0.4 |
| 2-HEXANONE | 0.18 |
| ISOP ALCOHOL | 7.5 |
| METH CHLR | 0.43 |
| MEK | 2.3 |
| MIK | 0.14 |
| NAPH | 0.27 |
| 1,2,4-TMB | 0.26 |
| 1,3,5-TMB | 0.094 |
| 2,2,4-TMP | 0.11 |
| TBA | 0.23 |
| PCE | 0.23 |
| TETRAHYDROFURAN | 0.5 |
| T | 1.3 |
| TRICLFL METH | 0.34 |
| X | 6.4 |
| OTHER VOCs | <MDL |

| IA-39 | |
|---|---|
| 9/24/2015 | |
| ACETONE | 65.1 |
| B | 0.35 |
| Chl | 0.19 |
| CHLOROMETHANE | 0.53 |
| CARBON TCHL | 0.15 |
| CYCLOHEXANE | 0.19 |
| DICLFMETH | 0.63 |
| ETHANOL | 489 |
| E | 5.1 |
| EA | 2.9 |
| 4-ETHYLTOLUENE | 0.092 |
| HEPTANE | 0.24 |
| HEXANE | 0.7 |
| ISOP ALCOHOL | 18 |
| METH CHLR | 0.32 |
| MEK | 5.5 |
| NAPH | 0.1 |
| ST | 0.11 |
| 1,2,4-TMB | 0.33 |
| 1,3,5-TMB | 0.11 |
| 2,2,4-TMP | 0.13 |
| TBA | 0.43 |
| PCE | 0.96 |
| TETRAHYDROFURAN | 1.9 |
| T | 2.1 |
| TRICLFL METH | 0.41 |
| X | 24 |
| OTHER VOCs | <MDL |

| IA-33 | |
|---|---|
| 9/24/2015 | |
| ACETONE | 21.8 |
| B | 0.33 |
| Chl | 0.1 |
| CHLOROMETHANE | 0.75 |
| CARBON TCHL | 0.099 |
| CYCLOHEXANE | 0.11 |
| 1,2-DCA | 0.16 |
| DICLFMETH | 0.6 |
| ETHANOL | 209 |
| E | 0.21 |
| EA | 10.2 |
| FREON 113 | 0.095 |
| HEPTANE | 0.15 |
| HEXANE | 0.35 |
| ISOP ALCOHOL | 13.3 |
| METH CHLR | 0.32 |
| MEK | 0.89 |
| NAPH | 0.11 |
| PROPYLENE | 6.8 |
| 1,2,4-TMB | 0.11 |
| 2,2,4-TMP | 0.098 |
| TBA | 0.19 |
| PCE | 0.14 |
| TETRAHYDROFURAN | 0.2 |
| T | 1.1 |
| TRICLFL METH | 0.32 |
| X | 0.95 |
| OTHER VOCs | <MDL |

| IA-32 | |
|---|---|
| 9/24/2015 | |
| ACETONE | 17.2 |
| B | 0.33 |
| Chl | 0.087 |
| CHLOROMETHANE | 0.8 |
| CARBON TCHL | 0.11 |
| 1,2-DCA | 0.13 |
| DICLFMETH | 0.66 |
| ETHANOL | 132 |
| E | 0.097 |
| EA | 5.7 |
| HEPTANE | 0.14 |
| HEXANE | 0.33 |
| ISOP ALCOHOL | 15.7 |
| METH CHLR | 0.32 |
| MEK | 0.52 |
| PROPYLENE | 6.6 |
| 1,2,4-TMB | 0.12 |
| 2,2,4-TMP | 0.097 |
| TBA | 0.18 |
| PCE | 0.14 |
| T | 0.98 |
| TRICLFL METH | 0.33 |
| X | 0.41 |
| OTHER VOCs | <MDL |

| IA-40 | |
|---|---|
| 9/24/2015 | |
| ACETONE | 11.2 |
| B | 0.35 |
| Chl | 0.1 |
| CHLOROMETHANE | 0.55 |
| CARBON TCHL | 0.1 |
| CYCLOHEXANE | 0.11 |
| DICLFMETH | 0.65 |
| ETHANOL | 51.5 |
| E | 0.19 |
| EA | 5.9 |
| HEPTANE | 0.14 |
| HEXANE | 1.6 |
| ISOP ALCOHOL | 4.3 |
| METH CHLR | 2.6 |
| MEK | 0.44 |
| PROPYLENE | 4.6 |
| ST | 0.13 |
| 1,2,4-TMB | 0.11 |
| 2,2,4-TMP | 0.13 |
| PCE | 1.3 |
| T | 1.3 |
| TRICLFL METH | 0.46 |
| X | 0.67 |
| OTHER VOCs | <MDL |

| IA-31 | |
|---|---|
| 9/24/2015 | |
| ACETONE | 10.9 |
| B | 0.26 |
| CHLOROMETHANE | 0.69 |
| CYCLOHEXANE | 0.13 |
| 1,2-DCA | 0.14 |
| DICLFMETH | 0.6 |
| ETHANOL | 69.5 |
| E | 0.08 |
| EA | 3.9 |
| HEPTANE | 0.13 |
| HEXANE | 0.31 |
| ISOP ALCOHOL | 19 |
| METH CHLR | 0.28 |
| MEK | 0.4 |
| PROPYLENE | 6.1 |
| PCE | 0.054 |
| T | 0.89 |
| TRICLFL METH | 0.3 |
| X | 0.32 |
| OTHER VOCs | <MDL |

## LEGEND:

| | |
|---|---|
| | SUBJECT PROPERTY |
| | APPROXIMATE FORMER/HISTORICAL SITE FEATURES |
| | POLE MOUNTED TRANSFORMER |
| | INDOOR AIR SAMPLE |
| B | BENZENE |
| T | TOLUENE |
| E | ETHYLBENZENE |
| X | XYLENES |
| 1,2,4-TMB | 1,2,4-TRIMETHYLBENZENE |
| 1,3,5-TMB | 1,3,5-TRIMETHYLBENZENE |
| 2,2,4-TMP | 2,2,4-TRIMETHYLPENTANE |
| 1,2-DCA | 1,2-DICHLOROETHANE |
| NAPH | NAPHTHALENE |
| Chl | CHLOROFORM |
| ST | STYRENE |
| TCE | TRICHLOROETHENE |
| PCE | TETRACHLOROETHENE |
| MEK | 2-BUTANONE (MEK) |
| MIK | METHYL ISOBUTYL KETONE |
| EA | ETHYL ACETATE |
| TBA | TERTIARYBUTYLALCOHOL |
| m-DCB | m-DICHLOROBENZENE |
| p-DCB | p-DICHLOROBENZENE |
| METH CHLR | METHYLENE CHLORIDE |
| ISOP ALCOHOL | ISOPROPYL ALCOHOL |
| CARBON TCHL | CARBON TETRACHLORIDE |
| DICLFMETH | DICHLORODIFLUOROMETHANE |
| TRICLFL METH | TRICHLOROFLUOROMETHANE |
| CARBON DISF | CARBON DISULFIDE |
| VOCs | VOLATILE ORGANIC COMPOUNDS |
| MDL | METHOD DETECTION LIMIT |
| UNITs | µg/Kg (UNLESS NOTED) |
| | VALUE EXCEEDS APPLICABLE CRITERIA |
| NOTES: | REFER TO TABLES FOR SPECIFIC COMPOUNDS ANALYZED |

PM ENVIRONMENTAL | Environmental & Engineering Services

# FIGURE 6C

INDOOR AIR SAMPLE LOCATION MAP WITH INDOOR AIR SAMPLE ANALYTICAL RESULTS - EASTERN APARTMENT COMPLEX

PROJ:

MEDICAL CENTER COURT APARTMENTS
1005 MAIDEN LANE
ANN ARBOR, MI

THIS IS NOT A LEGAL SURVEY

VERIFY SCALE 0 100'

IF NOT 1" ON THIS SHEET, ADJUST SCALES ACCORDINGLY.

DRN BY: ES | DATE: 11/3/2015

CHKD BY: AS | SCALE: 1" = 100'

FILE NAME: 01-5623-0-007F00R00

# Tables

PM ENVIRONMENTAL Environmental & Engineering Services

**TABLE 1**
**SUMMARY OF SOIL ANALYTICAL RESULTS: VOCs, PNAs, NITRATE, PESTICIDES, HERBICIDES, TOTAL PHOSPHOROUS, ARSENIC, AND LEAD**
**1005 MAIDEN LANE, ANN ARBOR, MICHIGAN**
**PM PROJECT #01-5623-0-007**

| VOLATILE ORGANIC COMPOUNDS (VOCs), POLYNUCLEAR AROMATIC HYDROCARBONS (PNAs), NITRATE, PESTICIDES, HERBICIDES, TOTAL PHOSPHOROUS, ARSENIC, AND LEAD (µg/Kg) | | | Tetrachloroethylene | Other VOCs | Anthracene | Benzo(a)anthracene | Benzo(b)fluoranthene | Benzo(k)fluoranthene | Benzo(g,h,i)perylene | Benzo(a)pyrene | Chrysene | Fluoranthene | Indeno(1,2,3-cd)pyrene | Phenanthrene | Pyrene | Other PNAs | Nitrate | 4,4'-DDD | 4,4'-DDE | Other Pesticides | Herbicides | Total Phosphorous | Arsenic | Lead |
|---|---|---|---|---|---|---|---|---|---|---|---|---|---|---|---|---|---|---|---|---|---|---|---|---|
| **Chemical Abstract Service Number (CAS#)** | | | 127184 | Various | 120127 | 56553 | 205992 | 207089 | 191242 | 50328 | 218019 | 206440 | 193395 | 85018 | 129000 | Various | 14797558 | 72-54-8 | 72-54-8 | Various | Various | 7723140 | 7440382 | 7439921 |
| **Sample ID** | **Sample Date** | **Sample Depth (feet bgs)** | **VOCs** | | **PNAs** | | | | | | | | | | | | **Nirate** | **Pesticides** | | | **Herbicides** | **Phosphorous** | **Metals** | |
| SB-1 | 09/03/2015 | 2.0-3.0 | <80 | <MDL | <300 | <300 | 600 | 600 | <300 | <300 | <300 | 700 | <300 | 400 | 400 | <MDL | <MDL | 50 | 30 | <MDL | <MDL | 626,000 | 3,530 | 22,000 |
| SB-3 | 09/03/2015 | 1.0-2.0 | <70 | <MDL | <300 | <300 | <300 | <300 | <300 | <300 | <300 | <300 | <300 | <300 | <300 | <MDL | <MDL | <20 | <20 | <MDL | <MDL | 353,000 | 720 | 26,000 |
| SB-4 | 09/03/2015 | 6.5-7.5 | 260 | <MDL | <300 | <300 | <300 | <300 | <300 | <300 | <300 | <300 | <300 | <300 | <300 | <MDL | NA | NA | NA | NA | NA | NA | NA | NA |
| SB-6 | 09/03/2015 | 8.5-9.5 | <70 | <MDL | 500 | 1,100 | 2,500 | 2,800 | 700 | 1,100 | 1,200 | 3,500 | 700 | 1,900 | 2,000 | <MDL | NA | NA | NA | NA | NA | NA | NA | NA |
| SB-7 | 09/03/2015 | 8.0-9.0 | <60 | <MDL | <300 | <300 | <300 | <300 | <300 | <300 | <300 | <300 | <300 | <300 | <300 | <MDL | NA | NA | NA | NA | NA | NA | NA | NA |
| **Cleanup Criteria Requirements for Response Activity (R 299.1 - R 299.50)**<br>**Generic Soil Cleanup Criteria Tables 2 and 3: Residential and Non-Residential Part 201 Generic Cleanup Criteria and Screening Levels/Part 213 Risk-Based Screening Levels, December 30, 2013**<br>**MDEQ Guidance Document For The Vapor Intrusion Pathway, Policy and Procedure Number: 09-017, Appendix D Vapor Intrusion Screening Values, May 2013** | | | | | | | | | | | | | | | | | | | | | | | | |
| **Residential (µg/Kg)** | | | | | | | | | | | | | | | | | | | | | | | | |
| **Statewide Default Background Levels** | | | NA | NA | NA | NA | NA | NA | NA | NA | NA | NA | NA | NA | NA | NA | NA | NA | NA | NA | NA | NA | 5,800 | 21,000 |
| **Drinking Water Protection (Res DWP)** | | | 100 | Various | 41,000 | NLL | NLL | NLL | NLL | NLL | NLL | 7.30E+05 | NLL | 56,000 | 4.80E+05 | Various | 2.0E+5 (N) | NLL | NLL | Various | Various | 1.30E+06 | 4,600 | 7.00E+05 |
| **Groundwater Surface Water Interface Protection (GSIP)** | | | 1,200 {X} | Various | ID | NLL | NLL | NLL | NLL | NLL | NLL | 5,500 | NLL | 2,100 | ID | Various | ID | NLL | NLL | Various | Various | (EE) | 4,600 | 2.5E+06 {G,X} |
| **Soil Volatilization to Indoor Air Inhalation (Res SVII)** | | | 11,000 | Various | 1.0E+9 {D} | NLV | ID | NLV | NLV | NLV | ID | 1.0E+9 {D} | NLV | 2.80E+06 | 1.0E+9 {D} | Various | NLV | NLV | NLV | Various | Various | NLV | NLV | NLV |
| **Ambient Air Infinite Source Volatile Soil Inhalation (Res VSI)** | | | 1.70E+05 | Various | 1.40E+09 | NLV | ID | NLV | NLV | NLV | ID | 7.40E+08 | NLV | 1.60E+05 | 6.50E+08 | Various | NLV | NLV | NLV | Various | Various | NLV | NLV | NLV |
| **Ambient Air Finite VSI for 5 Meter Source Thickness** | | | 4.80E+05 | Various | 1.40E+09 | NLV | ID | NLV | NLV | NLV | ID | 7.40E+08 | NLV | 1.60E+05 | 6.50E+08 | Various | NLV | NLV | NLV | Various | Various | NLV | NLV | NLV |
| **Ambient Air Finite VSI for 2 Meter Source Thickness** | | | 1.1E+06 | Various | 1.40E+09 | NLV | ID | NLV | NLV | NLV | ID | 7.40E+08 | NLV | 1.60E+05 | 6.50E+08 | Various | NLV | NLV | NLV | Various | Various | NLV | NLV | NLV |
| **Ambient Air Particulate Soil Inhalation (Res PSI)** | | | 2.7E+09 | Various | 6.70E+10 | ID | ID | ID | 8.00E+08 | 1.50E+06 | ID | 9.30E+09 | ID | 6.70E+06 | 6.70E+09 | Various | ID | 4.40E+07 | 3.20E+07 | Various | Various | 6.70E+07 | 7.20E+05 | 1.00E+08 |
| **Direct Contact (Res DC)** | | | 2.0E+05 {C} | Various | 2.30E+08 | 20,000 | 20,000 | 2.00E+05 | 2.50E+06 | 2,000 | 2.00E+06 | 4.60E+07 | 20,000 | 1.60E+06 | 2.90E+07 | Various | ID | 95,000 | 45,000 | Various | Various | 1.0E+09 (D) | 7,600 | 4.00E+05 |
| **Nonresidential (µg/Kg)** | | | | | | | | | | | | | | | | | | | | | | | | |
| **Drinking Water Protection (Nonres DWP)** | | | 100 | Various | 41,000 | NLL | NLL | NLL | NLL | NLL | NLL | 7.30E+05 | NLL | 1.60E+05 | 4.80E+05 | Various | 2.0E+5 (N) | NLL | NLL | Various | Various | 4.80E+06 | 4,600 | 7.00E+05 |
| **Soil Volatilization to Indoor Air Inhalation (Nonres SVII)** | | | 21,000 | Various | 1.0E+9 {D} | NLV | ID | NLV | NLV | NLV | ID | 1.0E+9 {D} | NLV | 5.10E+06 | 1.0E+9 {D} | Various | NLV | NLV | NLV | Various | Various | NLV | NLV | NLV |
| **Ambient Air Infinite Source Volatile Soil Inhalation (Nonres VSI)** | | | 2.10E+05 | Various | 1.60E+09 | NLV | ID | NLV | NLV | NLV | ID | 8.90E+08 | NLV | 1.90E+05 | 7.80E+08 | Various | NLV | NLV | NLV | Various | Various | NLV | NLV | NLV |
| **Ambient Air Finite VSI for 5 Meter Source Thickness** | | | 4.90E+05 | Various | 1.60E+09 | NLV | ID | NLV | NLV | NLV | ID | 8.80E+08 | NLV | 1.90E+05 | 7.80E+08 | Various | NLV | NLV | NLV | Various | Various | NLV | NLV | NLV |
| **Ambient Air Finite VSI for 2 Meter Source Thickness** | | | 1.1E+06 | Various | 1.60E+09 | NLV | ID | NLV | NLV | NLV | ID | 8.80E+08 | NLV | 1.90E+05 | 7.80E+08 | Various | NLV | NLV | NLV | Various | Various | NLV | NLV | NLV |
| **Ambient Air Particulate Soil Inhalation (Nonres PSI)** | | | 1.2E+09 | Various | 2.90E+10 | ID | ID | ID | 3.50E+08 | 1.90E+06 | ID | 4.10E+09 | ID | 2.90E+06 | 2.90E+09 | Various | ID | 5.60E+07 | 4.00E+07 | Various | Various | 2.80E+08 | 9.10E+05 | 4.40E+07 |
| **Direct Contact (Nonres DC)** | | | 9.3E+05 {C} | Various | 7.30E+08 | 80,000 | 80,000 | 8.00E+05 | 7.00E+06 | 8,000 | 8.00E+06 | 1.30E+08 | 80,000 | 5.20E+06 | 8.40E+07 | Various | ID | 4.00E+05 | 1.90E+05 | Various | Various | 4.80E+05 | 37,000 | 9.0E+5 (DD) |
| **Screening Levels (µg/Kg)** | | | | | | | | | | | | | | | | | | | | | | | | |
| **Soil Saturation Concentration Screening Levels (Csat)** | | | 88,000 | Various | NA | NA | NA | NA | NA | NA | NA | NA | NA | NA | NA | Various | NA | NA | NA | NA | NA | NA | NA | NA |
| **Residential Vapor Intrusion Soil Screening Levels ($S_{VI\text{-}res}$)** | | | 52 | Various | 3.56E+07 | NL | NL | NL | NL | NL | NL | NL | NL | 5,100 | 6.47E+07 | Various | NL | NL | NL | NL | NL | NL | NL | NL |
| **Nonresidential Vapor Intrusion Soil Screening Levels ($S_{VI\text{-}nr}$)** | | | 1,000 | Various | 5.98E+08 | NL | NL | NL | NL | NL | NL | NL | NL | 86,000 | 1.09E+09 | Various | NL | NL | NL | NL | NL | NL | NL | NL |

| | |
|---|---|
| | Applicable Criterion/RBSL Exceeded |
| **BOLD** | Value Exceeds Applicable Criterion/RBSL |
| bgs | Below Ground Surface (feet) |
| <MDL | Non-detected at levels above laboratory method detection limit (MDL) |
| NA | Not Applicable |
| NL | Not Listed |
| NLL | Not Likely to Leach |
| NLV | Not Likely to Volatilize |
| ID | Insufficient Data |
| {G} | Metal GSIP Criteria for Surface Water Protected for Drinking Water Use based on 231 mg/L CaCO3 Hardness: Station ID 810313, Raisin River, near Bridgewater, MI. |

**TABLE 2**
**SUMMARY OF GROUNDWATER ANALYTICAL RESULTS: VOCs AND PNAs**
**1005 MAIDEN LANE**
**PM PROJECT #01-5623-0-007**

| VOLATILE ORGANIC COMPOUNDS (VOCs) AND POLYNUCLEAR AROMATIC HYDROCARBONS (PNAs) (µg/L) | | | | Chloroform | Tetrachloroethylene | Trichloroethylene | Other VOCs | PNAs |
|---|---|---|---|---|---|---|---|---|
| **Chemical Abstract Service Number (CAS#)** | | | | 67663 | 127184 | 79016 | Various | Various |
| **Sample ID** | **Sample Date** | **Screen Depth (feet bgs)** | **Depth to Groundwater (feet bgs)** | **VOCs** | | | | **PNAs** |
| TMW-1 | 09/03/2015 | 15.0-20.0 | 6.50 | <20 | **420** | <20 | <MDL | <MDL |
| TMW-2 | 09/03/2015 | 8.0-13.0 | 8.75 | <50 | **1,330** | <50 | <MDL | <MDL |
| TMW-3 | 09/03/2015 | 10.0-15.0 | 8.60 | <50 | **1,150** | <50 | <MDL | <MDL |
| TMW-4 | 09/03/2015 | 5.0-10.0 | 7.65 | <1 | **154** | 1 | <MDL | <MDL |
| TMW-5 | 09/03/2015 | 8.00-13.00 | 8.67 | <1 | <1 | <1 | <MDL | <MDL |
| TMW-6 | 09/03/2015 | 7.29-12.29 | 8.07 | <1 | <1 | <1 | <MDL | <MDL |
| TMW-8 | 09/03/2015 | 15.0-20.0 | 9.70 | <1 | <1 | <1 | <MDL | <MDL |
| TMW-9 | 10/14/2015 | 7.89-12.89 | 8.91 | <200 | **1,100** | <200 | <MDL | <MDL |
| TMW-10 | 10/14/2015 | 8.26-13.26 | 9.61 | <1 | 2 | <1 | <MDL | <MDL |
| TMW-11 | 10/14/2015 | 12.76-17.36 | 9.68 | <100 | **900** | <100 | <MDL | <MDL |
| TMW-12 | 10/14/2015 | 7.23-13.23 | 9.41 | <1 | <1 | <1 | <MDL | <MDL |
| TMW-13 | 10/14/2015 | 9.97-14.97 | 10.74 | 2 | **150** | <1 | <MDL | <MDL |
| TMW-14 | 10/14/2015 | 8.32-13.32 | 9.75 | <1 | <1 | <1 | <MDL | <MDL |
| **Cleanup Criteria Requirements for Response Activity (R 299.1 - R 299.50)**<br>**Generic Groundwater Cleanup Criteria Table 1: Residential and Non-Residential Part 201 Generic Cleanup Criteria and Screening Levels/Part 213 Risk-Based Screening Levels, December 30, 2013**<br>**MDEQ Guidance Document For The Vapor Intrusion Pathway, Policy and Procedure Number: 09-017, Appendix D Vapor Intrusion Screening Values, May 2013** | | | | | | | | |
| **Residential/Nonresidential (µg/L)** | | | | | | | | |
| **Residential Drinking Water (Res DW)** | | | | 80 {A,W} | 5.0 {A} | 5.0 {A} | Various | Various |
| **Residential Health Based Drinking Water Values** | | | | NL | NL | NL | Various | Various |
| **Nonresidential Drinking Water (Nonres DW)** | | | | 80 {A,W} | 5.0 {A} | 5.0 {A} | Various | Various |
| **Nonresidential Health Based Drinking Water Values** | | | | NL | NL | NL | Various | Various |
| **Groundwater Surface Water Interface (GSI)** | | | | 350 | 60 {X} | 200 {X} | Various | Various |
| **Residential Groundwater Volatilization to Indoor Air Inhalation (Res GVII)** [1] | | | | 28,000 | 25,000 | 2,200 | Various | Various |
| **Nonresidential Groundwater Volatilization to Indoor Air Inhalation (Nonres GVII)** [1] | | | | 1.80E+05 | 1.70E+05 | 4,900 | Various | Various |
| **Screening Levels (µg/L)** | | | | | | | | |
| **Residential Groundwater Vapor Intrusion Screening Levels ($GW_{VI\text{-}res}$)** [2] | | | | 140 | 94 | 9.8 | Various | Various |
| **Nonresidential Groundwater Vapor Intrusion Screening Levels ($GW_{VI\text{-}nr}$)** [2] | | | | 720 | 460 | 41 | Various | Various |
| **Residential Vapor Intrusion Shallow Groundwater Screening Levels ($GW_{VI\text{-}sump\text{-}res}$)** [3] | | | | 80.0 | 5.0 | 5.0 | Various | Various |
| **Nonresidential Vapor Intrusion Shallow Groundwater Screening Levels ($GW_{VI\text{-}sump\text{-}nr}$)** [3] | | | | 80.0 | 5.0 | 5.0 | Various | Various |
| **Water Solubility** | | | | 7.92E+06 | 2.00E+05 | 1.10E+06 | Various | Various |
| **Flammability and Explosivity Screening Level** | | | | ID | ID | ID | Various | Various |
| **Acute Vapor Intrusion Screening Levels for Groundwater (µg/L)** | | | | | | | | |
| **IRASL Groundwater ($AGW_{vi}$)** | | | | 1.9E+03 | 5.2E+04 | 2.0E+06 | Various | Various |
| **IRASL Groundwater In Contact With Structure ($AGW_{vi\text{-}sump}$)** | | | | 2 | 53 | 2,000 | Various | Various |

| | |
|---|---|
| | Applicable Criteria/RBSL Exceeded |
| **BOLD** | Value Exceeds Applicable Criteria |
| | Value Exceeds Residential and/or Nonresidential Groundwater VISL |
| Underline | Screening Level Exceeded |
| bgs | Below Ground Surface (feet) |
| <MDL | Not detected at levels above the laboratory Method Detection Limit (MDL) or Minimum Quantitative Level (MQL) |
| [1] | Tier 1 GVII Criteria based on 3 meter (or greater) groundwater depth |
| [2] | (2013 Vapor Intrusion Guidance) Screening Levels based on depth to groundwater less than 3.0 meters and not in contact with building foundation |
| [3] | (2013 Vapor Intrusion Guidance) Screening levels based on groundwater in contact with the building foundation or within a sump |
| NL | Not Listed |
| ID | Insufficient Data |

**TABLE 3**
**SUMMARY OF SOIL GAS ANALYTICAL RESULTS: VOCs**
**1005 MAIDEN LANE, ANN ARBOR, MICHIGAN**
**PM PROJECT #01-5623-0-007**

| VOLATILE ORGANIC COMPOUNDS (VOCs) (ppbv) | | | Acetone | Benzene | Carbon disulfide | Chloromethane | Cyclohexane | Dichlorodifluoromethane | trans-1,2-Dichloroethylene | cis-1,2-Dichloroethylene | m-Dichlorobenzene | Ethanol | Ethylbenzene | 4-Ethyltoluene | Heptane | Hexane | 2-Hexanone | Isopropyl Alcohol | Methyl ethyl ketone | Methyl Isobutyl Ketone | Methylmethacrylate | Naphthalene | Propylene | Styrene | 1,1,1-Trichloroethane | 1,2,4-Trimethylbenzene | 1,3,5-Trimethylbenzene | 2,2,4-Trimethylpentane | Tertiary Butyl Alcohol | Tetrachloroethylene | Tetrahydrofuran | Toluene | Trichloroethylene | Trichlorofluoromethane | Vinyl chloride | Vinyl Acetate | Xylenes | Other VOCs |
|---|---|---|---|---|---|---|---|---|---|---|---|---|---|---|---|---|---|---|---|---|---|---|---|---|---|---|---|---|---|---|---|---|---|---|---|---|---|---|---|
| Chemical Abstract Service Number (CAS#) | | | 67641 | 71432 | 75150 | 74873 | 110827 | 75718 | 156605 | 156592 | 541731 | 64175 | 100414 | 622968 | 142825 | 110543 | 591786 | 67630 | 78933 | 108101 | 80626 | 91203 | 115071 | 100425 | 71556 | 95636 | 108678 | 540841 | 75650 | 127184 | 109999 | 108883 | 79016 | 75694 | 75014 | 108054 | 1330207 | Various |
| Sample ID | Sample Date | Sample Depth (feet bgs) | VOCs | | | | | | | | | | | | | | | | | | | | | | | | | | | | | | | | | | | | |
| SG-1 | 09/03/2015 | 8.0 | 920 | 51 | 28 | 13 | 98 | <2 | <2 | 2 | 12 | <25 | 4 | <2 | 100 | 270 | <5 | 3,830 | 50 | 10 | 15 | <5 | 2,200 | <2 | 16 | 4 | <2 | <2 | 10 | **2,870** | 14 | 31 | 55 | <2 | 6 | <30 | 14 | <MDL |
| SG-2 | 09/03/2015 | 7.5 | 550 | 16 | 4 | <2 | 23 | 5 | 10 | 12 | 10 | 33 | 4 | <2 | 36 | 69 | <5 | 3,500 | 60 | 13 | <2 | <5 | 242 | <2 | <2 | 4 | <2 | <2 | 20 | 1,040 | 15 | 23 | 68 | <2 | <2 | <30 | 14 | <MDL |
| SG-3 | 09/03/2015 | 7.0 | <350 | 14.7 | 4.0 | 2.1 | 20.1 | 21.1 | <0.4 | <0.4 | 4.6 | 18.8 | 7.0 | 0.5 | 20.4 | 60.8 | 1 | 145.9 | 21.1 | 6 | <0.4 | <1 | 578.7 | 0.6 | <0.4 | 1.9 | 0.6 | <0.4 | 14.7 | <0.4 | 5.1 | 36.9 | <0.4 | 0.6 | <0.4 | <50 | 36 | <MDL |
| SG-4 | 09/03/2015 | 8.0 | 207.2 | 1.6 | 0.8 | 0.5 | 1.5 | 2.7 | <0.2 | <0.2 | 3.1 | 25.4 | 5.2 | 0.3 | 3.2 | 4.4 | <0.7 | 150.8 | 17.8 | 2.9 | <0.2 | 0.6 | 54.6 | 0.5 | <0.2 | 1.3 | 0.4 | 0.3 | 9.7 | 1.5 | 5.3 | 32.8 | <0.2 | 0.3 | <0.2 | 3.5 | 27.1 | <MDL |
| SS-1 | 10/14/2015 | Sub-Slab | 20 | <2 | <5 | <2 | <2 | <2 | <2 | <2 | <2 | <25 | <2 | <2 | <2 | <2 | <5 | <10 | <10 | <5 | <2 | <5 | <2 | <2 | <2 | <2 | <2 | <2 | <10 | **1,090** | <2 | <2 | <2 | <2 | <2 | <2 | <6 | <MDL |
| SS-2 | 10/14/2015 | Sub-Slab | 37.6 | 0.8 | <0.5 | <0.2 | 0.5 | 0.5 | <0.2 | <0.2 | <0.2 | 57 | 1.2 | 0.5 | 1.0 | 0.9 | 0.7 | <1.0 | 2.6 | 0.6 | <0.2 | 0.7 | 1.0 | 0.4 | <0.2 | 1.5 | 0.5 | <0.2 | 3.2 | 1.2 | 0.3 | 2.4 | <0.2 | 0.2 | <0.2 | <0.2 | 5.2 | <MDL |
| SS-3 | 10/14/2015 | Sub-Slab | 120 | <2 | <5 | <2 | <2 | <2 | <2 | <2 | <2 | <25 | <2 | <2 | <2 | <2 | <5 | <10 | <10 | <5 | <2 | <5 | <2 | <2 | <2 | <2 | <2 | <2 | <10 | **1,340** | <2 | <2 | <2 | <2 | <2 | <2 | <6 | <MDL |
| SS-4 | 10/14/2015 | Sub-Slab | 110 | 0.4 | <0.5 | <0.2 | <0.2 | 0.5 | <0.2 | <0.2 | <0.2 | 55 | 1.3 | 0.6 | 0.3 | 0.3 | 0.6 | <1.0 | 4.5 | <0.5 | <0.2 | 1.0 | 0.4 | 0.5 | <0.2 | 1.6 | 0.6 | <0.2 | 2.8 | 1.3 | 0.3 | 1.6 | <0.2 | 0.3 | <0.2 | <0.2 | 6.0 | <MDL |
| **MDEQ Guidance Document For The Vapor Intrusion Pathway, Policy and Procedure Number: 09-017, Appendix D Vapor Intrusion Screening Values, May 2013** | | | | | | | | | | | | | | | | | | | | | | | | | | | | | | | | | | | | | | | |
| **Residential Screening Levels (ppbv)** | | | | | | | | | | | | | | | | | | | | | | | | | | | | | | | | | | | | | | | |
| **Vapor Intrusion Indoor Air Screening Levels ($IA_{VI}$)** | | | 2,500 | 0.97 | 220 | 20 | 1,700 | 9,900 | 17 | 1.7 | 0.49 | NDC | 19 | NDC | 850 | 200 | 7.4 | NDC | 1,700 | 730 | NDC | 0.41 | NDC | 11 | 1,100 | 44 | 44 | 740 | NDC | 5.0 | 6.0 | 1,300 | 0.37 | 9,900 | 0.62 | 56 | 23 | Various |
| **Vapor Intrusion Shallow Sub-Slab Soil Gas Screening Levels (≤ 1.5m bgs) ($SG_{VI-SS}$)** | | | 82,000 | 32 | 7,400 | 650 | 58,000 | 3.30E+05 | 580 | 58 | 16 | NDC | 640 | NDC | 28,000 | 6,600 | 250 | NDC | 56,000 | 24,000 | NDC | 14 | NDC | 350 | 36,000 | 1,500 | 1,500 | 25,000 | NDC | 170 | 200 | 44,000 | 12 | 3.30E+05 | 21 | 1,900 | 760 | Various |
| **Vapor Intrusion Deep Soil Gas Screening Levels ($SG_{VI}$)** | | | 8.20E+05 | 320 | 74,000 | 6,500 | 5.80E+05 | 3.30E+06 | 5,800 | 580 | 160 | NDC | 6,400 | NDC | 2.80E+05 | 66,000 | 2,500 | NDC | 5.60E+05 | 2.40E+05 | NDC | 140 | NDC | 3,500 | 3.60E+05 | 15,000 | 15,000 | 2.50E+05 | NDC | 1,700 | 2,000 | 4.40E+05 | 120 | 3.30E+06 | 210 | 19,000 | 7,600 | Various |
| **Nonresidential Screening Levels (ppbv)** | | | | | | | | | | | | | | | | | | | | | | | | | | | | | | | | | | | | | | | |
| **Vapor Intrusion Indoor Air Screening Levels ($IA_{VI}$)** | | | 10,000 | 4.9 | 940 | 98 | 7,300 | 42,000 | 73 | 7.3 | 2.1 | NDC | 96 | NDC | 3,600 | 830 | 31 | NDC | 7,100 | 3,000 | NDC | 2.1 | NDC | 53 | 4,600 | 190 | 190 | 3,100 | NDC | 25 | 25 | 5,500 | 1.5 | 42,000 | 12 | 240 | 96 | Various |
| **Vapor Intrusion Shallow Sub-Slab Soil Gas Screening Levels (≤ 1.5m bgs) ($SG_{VI-SS}$)** | | | 1.40E+06 | 650 | 1.20E+05 | 13,000 | 9.70E+05 | 5.60E+06 | 9,800 | 980 | 280 | NDC | 13,000 | NDC | 4.70E+05 | 1.10E+05 | 4,100 | NDC | 9.40E+05 | 4.10E+05 | NDC | 280 | NDC | 7,100 | 6.10E+05 | 25,000 | 25,000 | 4.20E+05 | NDC | 3,300 | 3,400 | 7.40E+05 | 210 | 5.60E+06 | 1,500 | 32,000 | 13,000 | Various |
| **Vapor Intrusion Deep Soil Gas Screening Levels ($SG_{VI}$)** | | | 1.40E+07 | 6,500 | 1.20E+06 | 1.30E+05 | 9.70E+06 | 5.60E+07 | 98,000 | 9,800 | 2,800 | NDC | 1.30E+05 | NDC | 4.70E+06 | 1.10E+06 | 41,000 | NDC | 9.40E+06 | 4.10E+06 | NDC | 2,800 | NDC | 71,000 | 6.10E+06 | 2.50E+05 | 2.50E+05 | 4.20E+06 | NDC | 33,000 | 34,000 | 7.40E+06 | 2100 | 5.60E+07 | 15,000 | 3.20E+05 | 1.30E+05 | Various |
| **DRAFT Acute Vapor Intrusion Screening Levels for Indoor Air and Soil Gas; Residential and Nonresidential Land Use, February 2013 (ppbv)** | | | | | | | | | | | | | | | | | | | | | | | | | | | | | | | | | | | | | | | |
| **IRASL Indoor Air ($AIA_{vi}$)** | | | 25,000 | 390 | 1,900 | 460 | NDC | NDC | 190 | 1.34E+05 | NDC | NDC | NDC | NDC | NDC | NDC | NDC | NDC | 4,200 | NDC | NDC | NDC | NDC | 4,700 | 12,000 | NDC | NDC | NDC | NDC | 2,800 | NDC | 9,300 | 74,000 | NDC | 67,000 | NDC | 4,800 | Various |
| **IRASL Soil Gas ($ASG_{vi}$)** | | | 8.28E+05 | 13,000 | 63,000 | 16,000 | NDC | NDC | 6,500 | 4.48E+06 | NDC | NDC | NDC | NDC | NDC | NDC | NDC | NDC | 1.40E+05 | NDC | NDC | NDC | NDC | 1.56E+05 | 3.95E+05 | NDC | NDC | NDC | NDC | 93,000 | NDC | 3.10E+05 | 2.48E+06 | NDC | 2.23E+06 | NDC | 1.60E+05 | Various |

Applicable Criteria/RBSL Exceeded

**BOLD** Value Exceeds Applicable Criteria

<MDL Not detected at levels above the laboratory Method Detection Limit (MDL) or Minimum Quantitative Level (MQL)

NDC "No Defined Criteria" by the Michigan Department of Environmental Quality (MDEQ)

IRASL Immediate Response Acute Vapor Intrusion Screening Levels

**TABLE 4**
**SUMMARY OF INDOOR AIR ANALYTICAL RESULTS: VOCs**
**1005 MAIDEN LANE, ANN ARBOR, MICHIGAN**
**PME PROJECT # 01-5623-0-007**

| VOLATILE ORGANIC COMPOUNDS (VOCs) (ppbv) | | | Acetone | Benzene | Carbon disulfide | Chloroform | Chloromethane | Carbon tetrachloride | Cyclohexane | 1,2-Dichloroethane | Dichlorodifluoromethane | m-Dichlorobenzene | p-Dichlorobenzene | Ethanol | Ethylbenzene | Ethyl Acetate | 4-Ethyltoluene | Freon 113 | Heptane | Hexane | 2-Hexanone | Isopropyl Alcohol | Methylene chloride | Methyl ethyl ketone | Methyl Isobutyl Ketone | Naphthalene | Propylene | Styrene | 1,2,4-Trimethylbenzene | 1,3,5-Trimethylbenzene | 2,2,4-Trimethylpentane | Tertiary Butyl Alcohol | Tetrachloroethylene | Tetrahydrofuran | Toluene | Trichloroethylene | Trichlorofluoromethane | Xylenes (total) | Other VOCs |
|---|---|---|---|---|---|---|---|---|---|---|---|---|---|---|---|---|---|---|---|---|---|---|---|---|---|---|---|---|---|---|---|---|---|---|---|---|---|---|---|
| Chemical Abstract Service Number (CAS#) | | | 67641 | 71432 | 75150 | 67663 | 74873 | 56235 | 110827 | 107062 | 75718 | 541731 | 106467 | 64175 | 100414 | 141786 | 622968 | 76131 | 142825 | 110543 | 591786 | 67630 | 75092 | 78933 | 108101 | 91203 | 115071 | 100425 | 95636 | 108678 | 540841 | 75650 | 127184 | 109999 | 108883 | 79016 | 75694 | 1330207 | Various |
| Sample ID | Sample Date | Sample Duration (hours) | VOCs | | | | | | | | | | | | | | | | | | | | | | | | | | | | | | | | | | | | |
| IA-1 | 9/24/2015 | 24 | 9.9 | 0.32 | <0.029 | <0.031 | 0.66 | <0.025 | <0.032 | <0.026 | 0.59 | <0.028 | <0.019 | 90.7 E | 0.13 J | 6.2 | <0.022 | <0.027 | 0.2 | 0.38 | <0.044 | 2.7 | 0.3 | 0.46 | <0.027 | <0.053 | 8.8 | <0.026 | 0.15 J | <0.030 | 0.11 J | <0.050 | 0.076 | <0.043 | 1.3 | <0.025 | 0.29 | 0.46 | <MDL |
| IA-2 | 9/24/2015 | 24 | 14.4 | 0.42 | <0.029 | 0.14 J | 0.85 | 0.099 J | 0.14 J | 0.13 J | 0.64 | <0.028 | <0.019 | 115 E | 0.29 | 9.8 | <0.022 | <0.027 | 0.92 | 0.48 | <0.044 | 7.9 | 0.47 | 0.7 | <0.027 | <0.053 | 11.4 | 0.13 J | 0.19 J | <0.030 | 0.16 J | <0.050 | 0.16 | <0.043 | 1.8 | 0.039 J | 0.41 | 0.86 | <MDL |
| IA-3 | 9/24/2015 | 24 | 14.5 | 0.42 | 0.32 | 0.11 J | 0.56 | 0.1 J | 0.25 | <0.026 | 0.6 | <0.028 | <0.019 | 128.0 | 0.49 | 11.2 | <0.022 | <0.027 | 77.3 | 0.41 | <0.044 | 3.6 | 0.28 | 0.69 | <0.027 | 0.19 J | <0.081 | 0.1 J | 0.17 J | <0.030 | 0.96 | <0.050 | 0.11 | <0.043 | 2.0 | <0.025 | 0.31 | 2.0 | <MDL |
| IA-4 | 9/24/2015 | 24 | 13.4 | 0.34 | <0.029 | <0.031 | 0.62 | 0.099 J | 0.1 J | <0.026 | 0.64 | <0.028 | <0.019 | 112 E | 0.2 | 3.4 | 0.18 J | <0.027 | 0.62 | 0.35 | <0.044 | 3.1 | 0.26 | 0.52 | <0.027 | <0.053 | 7.4 | <0.026 | 0.59 | 0.21 | 0.12 J | 0.18 J | 0.099 | <0.043 | 1.1 | <0.025 | 0.32 | 0.8 | <MDL |
| IA-5 | 9/24/2015 | 24 | 12.6 | 0.38 | <0.029 | <0.031 | 0.85 | 0.099 J | 0.15 J | <0.026 | 0.62 | <0.028 | <0.019 | 222 E | 0.15 J | 3.9 | <0.022 | <0.027 | 0.17 J | 0.48 | <0.044 | 52.0 | 0.29 | 0.54 | <0.027 | <0.053 | 8.0 | <0.026 | 0.23 | <0.030 | 0.14 J | 0.24 | 0.11 | <0.043 | 1.2 | <0.025 | 0.32 | 0.57 | <MDL |
| IA-6 | 9/24/2015 | 24 | 11.9 | 0.33 | <0.029 | 0.1 J | 0.74 | 0.089 J | 0.11 J | 0.16 J | 0.6 | <0.028 | <0.019 | 80.5 E | 0.14 J | 5.5 | <0.022 | <0.027 | 0.13 J | 0.36 | <0.044 | 6.1 | 0.25 | 0.48 | 0.14 J | <0.053 | 12.6 | 0.11 J | 0.13 J | <0.030 | 0.13 J | <0.050 | 0.35 | <0.043 | 1.5 | <0.025 | 0.33 | 0.56 | <MDL |
| IA-7 | 9/24/2015 | 24 | 11.4 | 0.34 | <0.029 | 0.15 J | 0.83 | 0.13 J | 0.15 J | <0.026 | 0.64 | <0.028 | <0.019 | 128 E | 0.13 J | 4.2 | <0.022 | <0.027 | 0.14 J | 2.3 | <0.044 | 2.8 | 11.2 | 0.43 | <0.027 | <0.053 | 6.3 | <0.026 | 0.12 J | <0.030 | 0.12 J | <0.050 | 0.1 | <0.043 | 1.0 | <0.025 | 0.43 | 0.54 | <MDL |
| IA-8 | 9/24/2015 | 24 | 11.3 | 0.31 | <0.029 | <0.031 | 0.5 | <0.025 | <0.032 | <0.026 | 0.6 | <0.028 | <0.019 | 37.0 | 0.13 J | 5.5 | <0.022 | <0.027 | 0.11 J | 0.5 | <0.044 | 2.2 | 1.0 | 0.49 | <0.027 | <0.053 | 8.0 | <0.026 | 0.11 J | <0.030 | 0.11 J | <0.050 | 0.28 | <0.043 | 1.0 | <0.025 | 0.32 | 0.55 | <MDL |
| IA-9 | 9/24/2015 | 24 | 11.1 | 0.34 | <0.029 | <0.031 | 0.46 | 0.096 J | 0.12 J | <0.026 | 0.62 | <0.028 | <0.019 | 143 E | 0.14 J | 6.7 | <0.022 | <0.027 | 0.25 | 0.4 | <0.044 | 3.1 | 0.31 | 0.49 | <0.027 | <0.053 | 9.3 | <0.026 | 0.13 J | <0.030 | 0.13 J | 0.27 | 0.19 | <0.043 | 1.2 | <0.025 | 0.3 | 0.61 | <MDL |
| IA-10 | 9/24/2015 | 24 | 30.8 | 0.32 | <0.029 | <0.031 | 0.53 | <0.025 | <0.032 | <0.026 | 0.6 | <0.028 | <0.019 | 93.1 E | 0.19 J | 4.4 | <0.022 | <0.027 | 0.19 J | 0.34 | 0.12 J | 4.3 | 0.29 | 1.0 | 0.14 J | 0.48 | 7.3 | <0.026 | 0.14 J | <0.030 | 0.11 J | 0.23 | 0.21 | <0.043 | 1.1 | <0.025 | 0.33 | 0.97 | <MDL |
| IA-11 | 9/24/2015 | 24 | 8.6 | 0.32 | <0.029 | <0.031 | 0.51 | 0.098 J | 0.099 J | <0.026 | 0.61 | <0.028 | <0.019 | 19.8 | 0.15 J | 3.4 | <0.022 | <0.027 | 0.12 J | 0.35 | <0.044 | 2.2 | 0.24 | 0.51 | <0.027 | <0.053 | 5.9 | <0.026 | 0.13 J | <0.030 | 0.13 J | <0.050 | 0.3 | <0.043 | 1.0 | <0.025 | 0.3 | 0.67 | <MDL |
| IA-12 | 9/24/2015 | 24 | 12.8 | 0.27 | <0.029 | <0.031 | 0.57 | <0.025 | <0.032 | <0.026 | 0.5 | <0.028 | <0.019 | 44.8 E | 0.17 J | 4.2 | <0.022 | <0.027 | 0.19 J | 0.33 | <0.044 | 4.4 | 0.35 | 0.53 | <0.027 | <0.053 | 7.5 | 0.053 J | 0.12 J | <0.030 | 0.73 | <0.050 | 0.98 | <0.043 | 0.88 | <0.025 | 0.26 | 0.62 | <MDL |
| IA-13 | 9/24/2015 | 24 | 22.3 | 0.27 | <0.029 | <0.031 | 0.6 | <0.025 | <0.032 | <0.026 | 0.5 | <0.028 | <0.019 | 52.3 E | 0.38 | 4.2 | <0.022 | <0.027 | 0.16 J | 0.31 | <0.044 | 2.2 | 0.3 | 0.54 | 0.24 | <0.053 | 6.5 | <0.026 | 0.14 J | <0.030 | 0.15 J | <0.050 | 0.25 | 0.18 J | 0.98 | <0.025 | 0.25 | 2.3 | <MDL |
| IA-14 | 9/24/2015 | 24 | 7.9 | 0.27 | <0.029 | <0.031 | 0.61 | <0.025 | <0.032 | <0.026 | 0.51 | <0.028 | <0.019 | 52.2 E | 0.092 J | 4.9 | <0.022 | <0.027 | 0.12 J | 0.31 | <0.044 | 1.1 | 0.35 | 0.35 | <0.027 | <0.053 | 6.3 | <0.026 | 0.1 J | <0.030 | <0.021 | 0.11 J | 0.45 | <0.043 | 0.98 | <0.025 | 0.26 | 0.4 | <MDL |
| IA-15 | 9/24/2015 | 24 | 23.6 | 0.26 | <0.029 | <0.031 | 0.58 | <0.025 | <0.032 | <0.026 | 0.48 | <0.028 | <0.019 | 35.0 | 0.12 J | 5.2 | 0.16 J | <0.027 | 0.16 J | 0.32 | <0.044 | 1.0 | 0.26 | 0.46 | <0.027 | <0.053 | 6.0 | <0.026 | 0.57 | 0.18 J | <0.021 | <0.050 | 0.3 | <0.043 | 0.93 | <0.025 | 0.24 | 0.52 | <MDL |
| IA-16 | 9/24/2015 | 24 | 10.5 | 0.28 | 0.27 | <0.031 | 0.67 | <0.025 | <0.032 | <0.026 | 0.5 | <0.028 | <0.019 | 116 E | 0.089 J | 5.5 | <0.022 | <0.027 | 0.17 J | 0.32 | <0.044 | 4.4 | 0.33 | 0.57 | 0.2 | <0.053 | 6.6 | <0.026 | 0.11 J | <0.030 | <0.021 | <0.050 | 0.056 | <0.043 | 1.0 | <0.025 | 0.25 | 0.36 | <MDL |
| IA-17 | 9/24/2015 | 24 | 11.8 | 0.25 | <0.029 | <0.031 | 0.67 | <0.025 | <0.032 | <0.026 | 0.5 | <0.028 | <0.019 | 140 E | 0.1 J | 4.7 | <0.022 | <0.027 | 0.15 J | 0.31 | <0.044 | 4.6 | 0.26 | 0.55 | <0.027 | <0.053 | 6.7 | <0.026 | 0.091 J | <0.030 | <0.021 | <0.050 | <0.024 | <0.043 | 1.0 | <0.025 | 0.28 | 0.44 | <MDL |
| IA-18 | 9/24/2015 | 24 | 18.5 | 0.24 | <0.029 | <0.031 | 0.58 | <0.025 | <0.032 | <0.026 | 0.48 | <0.028 | <0.019 | 253 E | 0.12 J | 6.2 | <0.022 | <0.027 | 0.21 | 0.28 | <0.044 | 3.0 | 0.23 | 0.59 | 0.18 J | <0.053 | 7.7 | <0.026 | 0.11 J | <0.030 | 0.088 J | 0.17 J | 0.04 | <0.043 | 0.78 | <0.025 | 0.24 | 0.57 | <MDL |
| IA-19 | 9/24/2015 | 24 | 11.8 | 0.25 | <0.029 | <0.031 | 0.69 | <0.025 | <0.032 | <0.026 | 0.55 | <0.028 | <0.019 | 460 E | 0.093 J | 2.6 | <0.022 | <0.027 | 0.28 | 0.29 | <0.044 | 3.0 | 0.23 | 0.45 | <0.027 | 0.34 | 5.7 | <0.026 | 0.098 J | <0.030 | 0.088 J | <0.050 | <0.024 | <0.043 | 0.96 | <0.025 | 0.3 | 0.36 | <MDL |
| IA-20 | 9/24/2015 | 24 | 11.0 | 0.28 | <0.029 | <0.031 | 0.63 | <0.025 | <0.032 | <0.026 | 0.57 | <0.028 | <0.019 | 294 E | 0.1 J | 2.9 | <0.022 | <0.027 | 0.35 | 0.29 | <0.044 | 3.7 | 0.21 | 0.4 | <0.027 | 0.36 | 5.8 | <0.026 | 0.12 J | <0.030 | 0.095 J | 0.12 J | <0.024 | <0.043 | 1.2 | <0.025 | 0.32 | 0.43 | <MDL |
| IA-21 | 9/24/2015 | 24 | 12.1 | 0.28 | <0.029 | <0.031 | 0.7 | <0.025 | <0.032 | <0.026 | 0.62 | <0.028 | <0.019 | 361 E | 0.093 J | 2.6 | <0.022 | <0.027 | 0.1 J | 0.3 | <0.044 | 5.0 | 0.26 | 0.4 | <0.027 | 0.11 J | <0.081 | 0.065 J | 0.1 J | <0.030 | 0.092 J | 0.18 J | 0.048 | <0.043 | 0.87 | <0.025 | 0.32 | 0.38 | <MDL |
| IA-22 | 9/24/2015 | 24 | 12.0 | 0.29 | <0.029 | <0.031 | 0.69 | <0.025 | <0.032 | <0.026 | 0.59 | <0.028 | <0.019 | 317 E | 0.095 J | 4.6 | <0.022 | <0.027 | 0.11 J | 0.31 | <0.044 | 5.0 | 0.26 | 0.41 | <0.027 | 0.12 J | 12.1 | <0.026 | 0.087 J | <0.030 | 0.091 J | 0.22 | <0.024 | <0.043 | 0.97 | <0.025 | 0.31 | 0.39 | <MDL |
| IA-23 | 9/24/2015 | 24 | 15.3 | 0.27 | <0.029 | <0.031 | 0.63 | <0.025 | <0.032 | <0.026 | 0.55 | <0.028 | <0.019 | 473 E | 0.092 J | 3.8 | <0.022 | <0.027 | <0.029 | 0.28 | <0.044 | 7.5 | 0.31 | 0.5 | <0.027 | 0.24 | 5.4 | <0.026 | <0.023 | <0.030 | <0.021 | 0.13 J | 0.046 | <0.043 | 0.74 | <0.025 | 0.29 | 0.39 | <MDL |
| IA-24 | 9/24/2015 | 24 | 15.2 | 0.27 | <0.029 | <0.031 | 0.63 | 0.089 J | <0.032 | <0.026 | 0.59 | <0.028 | <0.019 | 515 E | 0.1 J | 2.7 | <0.022 | <0.027 | <0.029 | 0.28 | <0.044 | 8.2 | 0.29 | 0.38 | <0.027 | 0.38 | 5.0 | <0.026 | <0.023 | <0.030 | 0.082 J | 0.12 J | 0.037 J | <0.043 | 0.74 | <0.025 | 0.31 | 0.39 | <MDL |
| IA-25 | 9/24/2015 | 24 | 13.2 | 0.27 | <0.029 | <0.031 | 0.69 | <0.025 | <0.032 | <0.026 | 0.59 | <0.028 | <0.019 | 82.3 E | 0.089 J | 7.6 | <0.022 | <0.027 | 0.086 J | 0.45 | <0.044 | 3.2 | 0.58 | 0.39 | <0.027 | <0.053 | 6.4 | <0.026 | 0.096 J | <0.030 | 0.087 J | 0.13 J | 0.083 | <0.043 | 0.86 | <0.025 | 0.33 | 0.39 | <MDL |
| IA-26 | 9/24/2015 | 24 | 30.2 | 0.3 | <0.029 | <0.031 | 0.72 | 0.089 J | 0.089 J | <0.026 | 0.57 | <0.028 | <0.019 | 156 E | 0.1 J | 6.6 | <0.022 | <0.027 | 0.14 J | 0.33 | <0.044 | 6.4 | 0.25 | 0.96 | <0.027 | <0.053 | 5.5 | <0.026 | 0.11 J | <0.030 | 0.097 J | 0.32 | 0.039 J | <0.043 | 0.96 | <0.025 | 0.3 | 0.44 | <MDL |
| IA-27 | 9/24/2015 | 24 | 16.2 | 0.24 | <0.029 | <0.031 | 0.63 | <0.025 | <0.032 | <0.026 | 0.57 | <0.028 | <0.019 | 102 E | 0.079 J | 2.9 | <0.022 | <0.027 | <0.029 | 0.28 | <0.044 | 1.5 | 0.29 | 0.38 | <0.027 | <0.053 | 5.4 | <0.026 | 0.1 J | <0.030 | <0.021 | 0.11 J | 0.065 | <0.043 | 0.76 | <0.025 | 0.29 | 0.32 | <MDL |
| IA-28 | 9/24/2015 | 24 | 49.0 | 0.29 | <0.029 | <0.031 | 0.72 | <0.025 | 0.096 J | <0.026 | 0.57 | <0.028 | <0.019 | 129 E | 0.11 J | 4.3 | <0.022 | <0.027 | 0.11 J | 0.35 | 0.11 J | 2.0 | 0.35 | 1.4 | 0.19 J | <0.053 | 8.0 | <0.026 | 0.26 | <0.030 | 0.096 J | 0.46 | 0.037 J | <0.043 | 0.78 | <0.025 | 0.3 | 0.55 | <MDL |
| IA-29 | 9/24/2015 | 24 | 13.0 | 0.27 | <0.029 | <0.031 | 0.84 | <0.025 | 0.13 J | <0.026 | 0.61 | <0.028 | <0.019 | 89.5 E | 0.1 J | 5.0 | <0.022 | <0.027 | 0.36 | 0.29 | <0.044 | 1.5 | 0.24 | 0.45 | <0.027 | <0.053 | 6.7 | <0.026 | 0.12 J | <0.030 | 0.085 J | 0.13 J | <0.024 | <0.043 | 0.99 | <0.025 | 0.29 | 0.46 | <MDL |
| IA-30 | 9/24/2015 | 24 | 25.4 | 0.29 | <0.029 | <0.031 | 0.79 | 0.087 J | 0.1 J | <0.026 | 0.58 | <0.028 | 0.52 | 96.4 E | 0.2 | 16.5 | <0.022 | <0.027 | 0.11 J | <0.028 | 0.12 J | 3.7 | 0.29 | 3.4 | 0.11 J | <0.053 | 6.5 | 0.1 J | 0.12 J | <0.030 | 0.096 J | 0.18 J | 3.7 | <0.043 | 1.2 | <0.025 | 0.32 | 0.78 | <MDL |
| IA-31 | 9/24/2015 | 24 | 10.9 | 0.26 | <0.029 | <0.031 | 0.69 | <0.025 | 0.13 J | 0.14 J | 0.6 | <0.028 | <0.019 | 69.5 E | 0.08 J | 3.9 | <0.022 | <0.027 | 0.13 J | 0.31 | <0.044 | 19.0 | 0.28 | 0.4 | <0.027 | <0.053 | 6.1 | <0.026 | <0.023 | <0.030 | <0.021 | <0.050 | 0.054 | <0.043 | 0.89 | <0.025 | 0.3 | 0.32 | <MDL |
| IA-32 | 9/24/2015 | 24 | 17.2 | 0.33 | <0.029 | 0.087 J | 0.8 | 0.11 J | <0.032 | 0.13 J | 0.66 | <0.028 | <0.019 | 132 E | 0.097 J | 5.7 | <0.022 | <0.027 | 0.14 J | 0.33 | <0.044 | 15.7 | 0.32 | 0.52 | <0.027 | <0.053 | 6.6 | <0.026 | 0.12 J | <0.030 | 0.097 J | 0.18 J | 0.14 | <0.043 | 0.98 | <0.025 | 0.33 | 0.41 | <MDL |
| IA-33 | 9/24/2015 | 24 | 21.8 | 0.33 | <0.029 | 0.1 J | 0.75 | 0.099 J | 0.11 J | 0.16 J | 0.6 | <0.028 | <0.019 | 209 E | 0.21 | 10.2 | <0.022 | 0.095 J | 0.15 J | 0.35 | <0.044 | 13.3 | 0.32 | 0.89 | <0.027 | 0.11 J | 6.8 | <0.026 | 0.11 J | <0.030 | 0.098 J | 0.19 J | 0.14 | 0.2 | 1.1 | <0.025 | 0.32 | 0.95 | <MDL |
| IA-34 | 9/24/2015 | 24 | 13.5 | 0.33 | <0.029 | 0.11 J | 0.43 | <0.025 | 0.11 J | <0.026 | 0.62 | <0.028 | <0.019 | 37.9 | 0.13 J | 5.2 | <0.022 | <0.027 | 0.32 | 0.89 | <0.044 | 3.3 | 1.4 | 0.49 | <0.027 | 0.19 J | 5.5 | <0.026 | 0.18 J | <0.030 | 0.094 J | <0.050 | 0.054 | <0.043 | 1.0 | <0.025 | 0.4 | 0.67 | <MDL |
| IA-35 | 9/24/2015 | 24 | 8.4 | 0.34 | <0.029 | <0.031 | 0.51 | 0.089 J | <0.032 | <0.026 | 0.6 | <0.028 | <0.019 | 240 E | 0.12 J | 5.9 | <0.022 | <0.027 | 0.13 J | 0.34 | <0.044 | 3.2 | 0.28 | 0.48 | <0.027 | 0.14 J | 6.4 | <0.026 | 0.12 J | <0.030 | 0.11 J | <0.050 | 0.16 | <0.043 | 1.3 | <0.025 | 0.31 | 0.47 | <MDL |
| IA-36 | 9/24/2015 | 24 | 13.3 | 0.26 | <0.029 | <0.031 | 0.72 | <0.025 | <0.032 | 0.22 | 0.62 | <0.028 | <0.019 | 174 E | 0.082 J | 4.2 | <0.022 | <0.027 | 0.093 J | 0.34 | <0.044 | 5.6 | 0.34 | 0.46 | <0.027 | <0.053 | 6.6 | <0.026 | 0.086 J | <0.030 | 0.081 J | <0.050 | 0.11 | <0.043 | 0.73 | <0.025 | 0.3 | 0.37 | <MDL |
| IA-37 | 9/24/2015 | 24 | 14.1 | 0.32 | <0.029 | <0.031 | 0.73 | <0.025 | <0.032 | 0.11 J | 0.62 | 0.097 J | <0.019 | 281 E | 0.14 J | 2.8 | <0.022 | <0.027 | 0.14 J | 0.41 | <0.044 | 5.0 | 0.39 | 0.75 | <0.027 | <0.053 | 6.5 | <0.026 | 0.099 J | <0.030 | 0.11 J | <0.050 | 0.9 | <0.043 | 1.7 | <0.025 | 0.34 | 0.55 | <MDL |
| IA-38 | 9/24/2015 | 24 | 78.5 | 0.36 | <0.029 | 0.29 | <0.029 | 0.1 J | <0.032 | <0.026 | 0.6 | <0.028 | <0.019 | 148.0 | 1.3 | 2.4 | <0.022 | <0.027 | 0.15 J | 0.4 | 0.18 J | 7.5 | 0.43 | 2.3 | 0.14 J | 0.27 | <0.081 | <0.026 | 0.26 | 0.094 J | 0.11 J | 0.23 | 0.23 | 0.5 | 1.3 | <0.025 | 0.34 | 6.4 | <MDL |
| IA-39 | 9/24/2015 | 24 | 65.1 | 0.35 | <0.029 | 0.19 J | 0.53 | 0.15 J | 0.19 J | <0.026 | 0.63 | <0.028 | <0.019 | 489 E | 5.1 | 2.9 | 0.092 J | <0.027 | 0.24 | 0.7 | <0.044 | 18.0 | 0.32 | 5.5 | <0.027 | 0.1 J | <0.081 | 0.11 J | 0.33 | 0.11 J | 0.13 J | 0.43 | 0.96 | 1.9 | 2.1 | <0.025 | 0.41 | 24.0 | <MDL |
| IA-40 | 9/24/2015 | 24 | 11.2 | 0.35 | <0.029 | 0.1 J | 0.55 | 0.1 J | 0.11 J | <0.026 | 0.65 | <0.028 | <0.019 | 51.5 E | 0.19 J | 5.9 | <0.022 | <0.027 | 0.14 J | 1.6 | <0.044 | 4.3 | 2.6 | 0.44 | <0.027 | <0.053 | 4.6 | 0.13 J | 0.11 J | <0.030 | 0.13 J | <0.050 | 1.3 | <0.043 | 1.3 | <0.025 | 0.46 | 0.67 | <MDL |
| **MDEQ Guidance Document For The Vapor Intrusion Pathway, Policy and Procedure Number: 09-017, Appendix D Vapor Intrusion Screening Values, May 2013** | | | | | | | | | | | | | | | | | | | | | | | | | | | | | | | | | | | | | | | |
| **Residential Screening Levels (ppbv)** | | | | | | | | | | | | | | | | | | | | | | | | | | | | | | | | | | | | | | | |
| **Vapor Intrusion Indoor Air Screening Levels ($IA_{vi}$)** | | | 2,500 | 0.97 | 220 | 2.2 | 20 | NDC | 1,700 | 0.24 | 9,900 | 0.49 | 0.62 | NDC | 19 | 880 | NDC | 2,500 | 850 | 200 | 7.4 | NDC | 27 | 1,700 | 730 | 0.41 | NDC | 11 | 44 | 44 | 740 | NDC | 5.0 | 6.0 | 1,300 | 0.37 | 9,900 | 23 | Various |
| **Vapor Intrusion Shallow Sub-Slab Soil Gas Screening Levels (≤ 1.5m bgs) ($SG_{vi\text{-}SS}$)** | | | 82,000 | 32 | 7,400 | 73 | 650 | NDC | 58,000 | 8.2 | 3.30E+05 | 16 | 21 | NDC | 640 | 29,000 | NDC | 84,000 | 28,000 | 6,600 | 250 | NDC | 880 | 56,000 | 24,000 | 14 | NDC | 350 | 1,500 | 1,500 | 25,000 | NDC | 170 | 200 | 44,000 | 12 | 3.30E+05 | 760 | Various |
| **Vapor Intrusion Deep Soil Gas Screening Levels ($SG_{vi}$)** | | | 8.20E+05 | 320 | 74,000 | 730 | 6,500 | NDC | 5.80E+05 | 82 | 3.30E+06 | 160 | 210 | NDC | 6,400 | 2.90E+05 | NDC | 8.40E+05 | 2.80E+05 | 66,000 | 2,500 | NDC | 8,800 | 5.60E+05 | 2.40E+05 | 140 | NDC | 3,500 | 15,000 | 15,000 | 2.50E+05 | NDC | 1,700 | 2,000 | 4.40E+05 | 120 | 3.30E+06 | 7,600 | Various |
| **Nonresidential Screening Levels (ppbv)** | | | | | | | | | | | | | | | | | | | | | | | | | | | | | | | | | | | | | | | |
| **Vapor Intrusion Indoor Air Screening Levels ($IA_{vi}$)** | | | 10,000 | 4.9 | 940 | 11 | 98 | NDC | 7,300 | 1.2 | 42,000 | 2.1 | 3.1 | NDC | 96 | 3,700 | NDC | 11,000 | 3,600 | 830 | 31 | NDC | 130 | 7,100 | 3,000 | 2.1 | NDC | 53 | 190 | 190 | 3,100 | NDC | 25 | 25 | 5,500 | 1.5 | 42,000 | 96 | Various |
| **Vapor Intrusion Shallow Sub-Slab Soil Gas Screening Levels (≤ 1.5m bgs) ($SG_{vi\text{-}SS}$)** | | | 1.40E+06 | 650 | 1.20E+05 | 1,500 | 13,000 | NDC | 9.70E+05 | 160 | 5.60E+06 | 280 | 420 | NDC | 13,000 | 4.90E+05 | NDC | 1.40E+06 | 4.70E+05 | 1.10E+05 | 4,100 | NDC | 18,000 | 9.40E+05 | 4.10E+05 | 280 | NDC | 7,100 | 25,000 | 25,000 | 4.20E+05 | NDC | 3,300 | 3,400 | 7.40E+05 | 210 | 5.60E+06 | 13,000 | Various |
| **Vapor Intrusion Deep Soil Gas Screening Levels ($SG_{vi}$)** | | | 1.40E+07 | 6,500 | 1.20E+06 | 15,000 | 1.30E+05 | NDC | 9.70E+06 | 1,600 | 5.60E+07 | 2,800 | 4,200 | NDC | 1.30E+05 | 4.90E+06 | NDC | 1.40E+07 | 4.70E+06 | 1.10E+06 | 41,000 | NDC | 1.80E+05 | 9.40E+06 | 4.10E+06 | 2,800 | NDC | 71,000 | 2.50E+05 | 2.50E+05 | 4.20E+06 | NDC | 33,000 | 34,000 | 7.40E+06 | 2100 | 5.60E+07 | 1.30E+05 | Various |
| **DRAFT Acute Vapor Intrusion Screening Levels for Indoor Air and Soil Gas; Residential and Nonresidential Land Use, February 2013 (ppbv)** | | | | | | | | | | | | | | | | | | | | | | | | | | | | | | | | | | | | | | | |
| **IRASL Indoor Air ($AIA_{vi}$)** | | | 25,000 | 390 | 1,900 | 29 | 460 | 290 | NDC | NDC | NDC | NDC | NDC | NDC | NDC | NDC | NDC | 15,000 | NDC | NDC | NDC | NDC | 6,400 | 4,200 | NDC | NDC | NDC | 4,700 | NDC | NDC | NDC | NDC | 2,800 | NDC | 9,300 | 74,000 | NDC | 4,800 | Various |
| **IRASL Soil Gas ($ASG_{vi}$)** | | | 8.28E+05 | 13,000 | 63,000 | 970 | 16,000 | 9,500 | NDC | NDC | NDC | NDC | NDC | NDC | NDC | NDC | NDC | 1.53E+04 | NDC | NDC | NDC | NDC | 2.15E+05 | 1.40E+05 | NDC | NDC | NDC | 1.56E+05 | NDC | NDC | NDC | NDC | 93,000 | NDC | 3.10E+05 | 2.48E+06 | NDC | 1.60E+05 | Various |

Applicable Criteria/RBSL Exceeded

**BOLD** Value Exceeds Applicable Criteria

bgs Below Ground Surface (feet)

<MDL Not detected at levels above the laboratory Method Detection Limit (MDL) or Minimum Quantitative Level (MQL)

NLV A hazardous substance is "Not Likely to Volatilize". This designation is given to any hazardous substance with a Henry's Law Constant of less than $1.0 \times 10^{-5}$ atm-$m^3$/mol.

ID "Insufficient Data" was available to the MDEQ in order to develop a criterion at the date of publication.

NDC "No Defined Criteria" by the Michigan Department of Environmental Quality (MDEQ)

IRASL Immediate Response Acute Vapor Intrusion Screening Levels

# Appendix B

PM ENVIRONMENTAL Environmental & Engineering Services

*Table 2*
*SUMMARY OF ANALYTICAL RESULTS FOR SOIL SAMPLES (PART 201)*
*Lowertown - Phase II Subsurface Investigation*
*923 Maiden Lane, Ann Arbor, Michigan*
*Sampling Date: November 20, 2001*

| Sample I.D. | Method Detection Limit | SB-1 | SB-2 | SB-3 | SB-4 | SB-5 | SB-6 | SB-7 | SB-8 | SB-8 | SB-9 | SB-10 | SB-11 | Part 201 Residential & Commercial I Drinking Water Protection Criteria | Part 201 Residential & Commercial I Indoor Air Inhalation Criteria | Part 201 Residential & Commercial I Ambient Air Inhalation Criteria (VSIC) | Part 201 Residential & Commercial I Soil Direct Contact Criteria |
|---|---|---|---|---|---|---|---|---|---|---|---|---|---|---|---|---|---|
| Sample Depth | | 2' | 11.5' | -- | 9' | -- | 4' | 12' | 12' | 24' | 12' | 12' | 12' | | | | |
| Laboratory | | EQL | EQL | EQL | EQL | EQL | EQL | EQL | EQL | EQL | EQL | EQL | EQL | | | | |
| VOLATILE ORGANIC COMPOUNDS (VOCs) | | | | | | | | | | | | | | | | | |
| Toluene | 50 | 140 | < | NS | < | NS | < | < | < | < | < | < | < | 16,000 | 250,000 {C} | 2,800,000 | 250,000 {C} |
| Ethylbenzene | 50 | *46,500* | < | NS | < | NS | < | < | < | < | < | < | < | 1,500 | 87,000 | 720,000 | 140,000 {C} |
| Total Xylenes | 150 | *208,000* | < | NS | < | NS | < | < | < | < | < | < | < | 5,600 | 150,000 {C} | 46,000,000 | 150,000 {C} |
| 1,2,4-Trimethylbenzene | 100 | *30,400* | < | NS | < | NS | 630 | < | < | < | < | < | < | 2,100 | 110,000 {C} | 21,000,000 | 110,000 {C} |
| 1,3,5-Trimethylbenzene | 100 | *268,000* | < | NS | < | NS | 140 | < | < | < | < | < | < | 1,800 | 94,000 {C} | 16,000,000 | 94,000 {C} |
| Naphthalene | 250 | *52,400* | < | NS | < | NS | < | < | < | < | < | < | < | 35,000 | 250,000 | 300,000 | 16,000,000 |
| 2-Methylnaphthalene | 250 | 329 | < | NS | < | NS | < | < | < | < | < | < | < | 57,000 | ID | ID | 8,100,000 |
| Tetrachloroethylene | 50 | NS | NS | NS | NS | NS | NS | *6,840* | *163,000* | *1,320* | *76,300* | *30,700* | *4,200* | 100 | 11,000 | 180,000 | 88,000 {C} |
| cis-1,2-Dichloroethylene | 50 | NS | NS | NS | NS | NS | NS | < | < | < | < | < | < | 1,400 | 22,000 | 180,000 | 640,000 {C} |
| All other VOCs | N/A | < | < | NS | < | NS | < | < | < | < | < | < | < | N/A | N/A | N/A | N/A |
| METALS | | | | | | | | | | | | | | | | | |
| Lead | 1,000 | 7,000 | 3,000 | NS | 8,000 | NS | 14,000 | NS | NS | NS | NS | NS | NS | 700,000 | NLV | NLV | 400,000 |

**NOTES:**

1. Presented in ug/kg (ppb)
2. < = Less than method detection limit
3. ID = Inadequate data to develop criterion
4. N/A = Not Applicable
5. NS = Not selected for analysis
6. {C} = Indicates value is at or above the soil saturation concentration
7. *Red/Bold* indicates value in excess of pertinent Part 201 Residential and Commercial I Criterion

*Table 3*
*SUMMARY OF ANALYTICAL RESULTS FOR GROUNDWATER SAMPLES (PART 201)*
*Lowertown - Phase II Subsurface Investigation*
*923 Maiden Lane, Ann Arbor, Michigan*
*Sampling Date: November 20, 2001*

| Sample I.D. | Method Detection Limit | SB-4 | SB-7 | SB-8 | SB-9 | SB-10 | SB-11 | Part 201 Residential & Commercial I Drinking Water Criteria | Part 201 Groundwater Surface Water Interface Protection Criteria | Part 201 Residential & Commercial I Indoor Air Inhalation Criteria | Part 201 Groundwater Direct Contact Criteria |
|---|---|---|---|---|---|---|---|---|---|---|---|
| Sample Depth | | 11-13' | 12-14' | 12-14' | 12-14' | 12-14' | 12-14' | | | | |
| Laboratory | | EQL | EQL | EQL | EQL | EQL | EQL | | | | |
| VOLATILE ORGANIC COMPOUNDS (VOCs) | | | | | | | | | | | |
| Ethylbenzene | 1.0 | 4.0 | < | < | < | < | < | 74 | 18 | 110,000 | 170,000 {S} |
| Total Xylenes | 3.0 | 17 | < | < | < | < | < | 280 | 35 | 190,000 {S} | 190,000 {S} |
| 1,2,4-Trimethylbenzene | 1.0 | 16 | < | < | < | < | < | 63 | 17 | 56,000 {S} | 56,000 {S} |
| 1,3,5-Trimethylbenzene | 1.0 | 19 | < | < | < | < | < | 72 | 44 | 61,000 {S} | 61,000 {S} |
| cis-1,2-Dichloroethylene | 1.0 | NS | < | 47 | 7.0 | < | 13 | 70 | 620 | 93,000 | 310,000 |
| Tetrachloroethylene | 1.0 | NS | 819 | 10,000 | 463 | 400 | 210 | 5.0 | 15 | 35,000 | 12,000 |
| 1,1,1-Trichloroethane | 1.0 | NS | < | 2.0 | < | < | < | 200 | 200 | 660,000 | 1,300,000 {S} |
| Trichloroethylene | 1.0 | NS | 109 | 18 | 102 | 7.0 | 3.0 | 5.0 | 200 | 75,000 | 22,000 |
| 1,1-Dichloroethane | 1.0 | NS | 16 | < | < | < | < | 7.0 | 65 | 100 | 31,000 |
| All other VOCs | N/A | < | < | < | < | < | < | N/A | N/A | N/A | N/A |

**NOTES:**

1. Presented in ug/L (ppb)
2. < = Less than method detection limit
3. N/A = Not Applicable
4. NS = Not selected for analysis
5. {S} = Criterion defaults to the chemical-specific water solubility limit
6. NLV = Hazardous substance is not likely to volatilize under most soil conditions
7. ID = Inadequate data to develop criterion
8. *Red/Bold* indicates value in excess of pertinent Part 201 Residential and Commercial I Criterion

## *Table 4*
## *SUMMARY OF ANALYTICAL RESULTS FOR SOIL SAMPLES (PART 201)*
### *Lowertown - Site Characterization Subsurface Investigation*
### *923 Maiden Lane, Ann Arbor, Michigan*
### *Sampling Date: November 11-12, 2002*

| Sample I.D. | Method Detection Limit | AH-10 | AH-10 | AH-11 | AH-11 | AH-12 | AH-12 | AH-13 | Part 201 Residential & Commercial I Drinking Water Protection Criteria | Part 201 Residential & Commercial I Indoor Air Inhalation Criteria | Part 201 Residential & Commercial I Groundwater Surface Water Interface Protection | Part 201 Residential & Commercial I Soil Direct Contact Criteria |
|---|---|---|---|---|---|---|---|---|---|---|---|---|
| Sample Depth | | 2' | 6' | 2' | 6' | 2' | 6' | 2' | | | | |
| Laboratory | | A-Plus | A-Plus | A-Plus | A-Plus | A-Plus | A-Plus | A-Plus | | | | |
| VOLATILE ORGANIC COMPOUNDS (VOCs) | | | | | | | | | | | | |
| 1,1-Dichloroethylene | 50 | < | < | < | < | < | < | < | 140 | 62 | 1,300 | 200,000 |
| cis-1,2-Dichloroethylene | 50 | < | < | < | < | < | < | < | 1,400 | 23,000 | ID | 640,000 {C} |
| Tetrachloroethylene | 50 | < | < | < | < | 63 | < | *1,579* | 100 | 11,000 | 900 | 88,000 {C} |
| Trichloroethylene | 50 | < | < | < | < | < | < | < | 100 | 7,100 | 4,000 | 500,000 {C} |
| All other VOCs | N/A | < | < | < | < | < | < | < | N/A | N/A | N/A | N/A |

**NOTES:**

1. Presented in ug/kg (ppb)
2. < = Less than method detection limit
3. ID = Inadequate data to develop criterion
4. N/A = Not Applicable
5. {C} = Indicates value is at or above the soil saturation concentration
6. *Red/Bold* indicates value in excess of pertinent Part 201 Residential and Commercial I Criterion

| Sample I.D. | Method Detection Limit | AH-13 | AH-14 | AH-14 | AH-14 | AH-14 | AH-15 | AH-15 | Part 201 Residential & Commercial I Drinking Water Protection Criteria | Part 201 Residential & Commercial I Indoor Air Inhalation Criteria | Part 201 Residential & Commercial I Groundwater Surface Water Interface Protection | Part 201 Residential & Commercial I Soil Direct Contact Criteria |
|---|---|---|---|---|---|---|---|---|---|---|---|---|
| Sample Depth | | 6' | 2' | 6' | 6' | 15' | 2' | 6' | | | | |
| Laboratory | | A-Plus | A-Plus | A-Plus | Fibertec | A-Plus | A-Plus | A-Plus | | | | |
| VOLATILE ORGANIC COMPOUNDS (VOCs) | | | | | | | | | | | | |
| 1,1-Dichloroethylene | 50 | < | < | < | < | < | < | < | 140 | 62 | 1,300 | 200,000 |
| cis-1,2-Dichloroethylene | 50 | < | < | < | < | < | < | < | 1,400 | 23,000 | ID | 640,000 {C} |
| Tetrachloroethylene | 50 | *5,740* | < | < | < | < | < | < | 100 | 11,000 | 900 | 88,000 {C} |
| Trichloroethylene | 50 | < | < | < | < | < | < | < | 100 | 7,100 | 4,000 | 500,000 {C} |
| All other VOCs | N/A | < | < | < | < | < | < | < | N/A | N/A | N/A | N/A |

**NOTES:**

1. Presented in ug/kg (ppb)
2. < = Less than method detection limit
3. ID = Inadequate data to develop criterion
4. N/A = Not Applicable
5. {C} = Indicates value is at or above the soil saturation concentration
6. *Red/Bold* indicates value in excess of pertinent Part 201 Residential and Commercial I Criterion

*Table 4 (cont.)*
*SUMMARY OF ANALYTICAL RESULTS FOR SOIL SAMPLES (PART 201)*
*Lowertown - Site Characterization Subsurface Investigation*
*923 Maiden Lane, Ann Arbor, Michigan*
*Sampling Date: November 11-12, 2002*

| Sample I.D. | Method Detection Limit | AH-16 | AH-16 | AH-16 | AH-17 | AH-17 | AH-17 | AH-22 | Part 201 Residential & Commercial I Drinking Water Protection Criteria | Part 201 Residential & Commercial I Indoor Air Inhalation Criteria | Part 201 Residential & Commercial I Ambient Air Inhalation Criteria (VSIC) | Part 201 Residential & Commercial I Soil Direct Contact Criteria |
|---|---|---|---|---|---|---|---|---|---|---|---|---|
| Sample Depth | | 2' | 6' | 11' | 2' | 6' | 12' | 12' | | | | |
| Laboratory | | A-Plus | A-Plus | A-Plus | A-Plus | A-Plus | A-Plus | A-Plus | | | | |
| VOLATILE ORGANIC COMPOUNDS (VOCs) | | | | | | | | | | | | |
| 1,1-Dichloroethylene | 50 | < | < | < | < | < | < | *352* | 140 | 62 | 1,100 | 200,000 |
| cis-1,2-Dichloroethylene | 50 | < | < | < | < | < | < | < | 1,400 | 22,000 | 180,000 | 640,000 {C} |
| Tetrachloroethylene | 50 | < | 55 | 26 | < | *133* | *112* | < | 100 | 11,000 | 180,000 | 88,000 {C} |
| Trichloroethylene | 50 | < | < | < | < | < | < | < | 100 | 7,100 | 78,000 | 500,000 |
| All other VOCs | N/A | < | < | < | < | < | < | < | N/A | N/A | N/A | N/A |

**NOTES:**

1. Presented in ug/kg (ppb)
2. < = Less than method detection limit
3. ID = Inadequate data to develop criterion
4. N/A = Not Applicable
5. NS = Not selected for analysis
6. {C} = Indicates value is at or above the soil saturation concentration
7. *Red/Bold* indicates value in excess of pertinent Part 201 Residential and Commercial I Criterion

*Table 5*

***SUMMARY OF ANALYTICAL RESULTS FOR GROUNDWATER SAMPLES (PART 201)***

***Lowertown - Site Characterization Subsurface Investigation***

***923 Maiden Lane, Ann Arbor, Michigan***

***Sampling Date: November 11-12, 2002***

| Sample I.D. / Sample Depth | Method Detection Limit | AH-15 / 16' | AH-17 / 15' | AH-22 / 13' | Part 201 Residential & Commercial I Defining Water Criteria | Part 201 Groundwater Surface Water Interface Protection Criteria | Part 201 Residential & Commercial I Indoor Air Inhalation Criteria | Part 201 Groundwater Direct Contact Criteria |
|---|---|---|---|---|---|---|---|---|
| VOLATILE ORGANIC COMPOUNDS (VOCs) | | | | | | | | |
| cis-1,2-Dichloroethylene | 1.0 | < | 2.0 | < | 70 | 420 | 93,000 | 200,000 |
| Tetrachloroethylene | 1.0 | 46 | 25 | 85 | 5.0 | 45 | 25,000 | 12,000 |
| All other VOCs | N/A | < | < | < | N/A | N/A | N/A | N/A |

**NOTES:**

1. Presented in ug/L (ppb)
2. < = Less than method detection limit
3. N/A = Not Applicable
4. NS = Not selected for analysis
5. ID = Inadequate data to develop criterion
6. NLV = Hazardous substance is not likely to volatilize under most soil conditions
7. *Red/Bold* indicates value in excess of pertinent Part 201 Residential and Commercial I Criterion

*Table 6*
*MAXIMUM CONCENTRATION OF VOCs & METALS IN SOIL (PART 201)*
*Lowertown - Phase II Subsurface Investigation*
*923 Maiden Lane, Ann Arbor, Michigan*
*Sampling Dates: November 20, 2001 & November 11-12, 2002*

| Sample I.D. | Method Detection Limit | Chemical Abstract Service Number (CAS #) | Maximum Concentration | Sample Location | Depth (ft.) | Part 201 Commercial III Drinking Water Protection Criteria | Part 201 Commercial III Groundwater Surface Water Interface Criteria | Part 201 Commercial III Indoor Air Inhalation Criteria | Part 201 Commercial III Ambient Air Inhalation Criteria | Part 201 Commercial III Soil Direct Contact Criteria |
|---|---|---|---|---|---|---|---|---|---|---|
| VOLATILE ORGANIC COMPOUNDS (VOCs) | | | | | | | | | | |
| Toluene | 50 | 108883 | 140 | SB-1 | 2' | 16,000 | 2,800 | 250,000 {C} | 3,300,000 | 250,000 {C} |
| Ethylbenzene | 50 | 100414 | 46,500 | SB-1 | 2' | 1,500 | 360 | 140,000 {C} | 2,400,000 | 140,000 {C} |
| Total Xylenes | 150 | 1330207 | 208,000 | SB-1 | 2' | 5,600 | 700 | 150,000 {C} | 54,000,000 | 150,000 {C} |
| 1,3,5-Trimethylbenzene | 100 | 108678 | 268,000 | SB-1 | 2' | 1,800 | 1,100 | 94,000 {C} | 19,000,000 | 94,000 {C} |
| 1,2,4-Trimethylbenzene | 100 | 95636 | 30,400 | SB-1 | 2' | 2,100 | 570 | 110,000 {C} | 25,000,000 | 110,000 {C} |
| Naphthalene | 250 | 91203 | 52,400 | SB-1 | 2' | 100,000 | 870 | 470,000 | 350,000 | 72,000,000 |
| 2-Methylnaphthalene | 250 | 91576 | 329 | SB-1 | 2' | 170,000 | ID | ID | ID | 37,000,000 |
| Tetrachloroethylene | 50 | 127184 | 163,000 | SB-8 | 12' | 100 | 900 | 60,000 | 600,000 | 88,000 {C} |
| 1,1-Dichloroethylene | 100 | 75354 | 352 | AH-22 | 12' | 140 | 1,300 | 330 | 3,700 | 570,000 {C} |
| All other VOCs | N/A | N/A | < | N/A | N/A | N/A | N/A | N/A | N/A | N/A |
| METALS | | | | | | | | | | |
| Lead | 1,000 | 7439921 | 14,000 | SB-6 | 4' | 700,000 | N/A | NLV | NLV | 400,000 |

**NOTES:**

1. Presented in ug/kg (ppb)
2. < = Less than method detection limit
3. N/A = Not Applicable
4. ID = Inadequate data to develop criterion
5. {C} = Indicates value is at or above the soil saturation concentration
6. NLV = Hazardous substance is not likely to volatilize under most soil conditions

*Table 7*
*MAXIMUM CONCENTRATION OF VOCs IN GROUNDWATER (PART 201)*
*Lowertown - Phase II Subsurface Investigation*
*923 Maiden Lane, Ann Arbor, Michigan*
*Sampling Dates: November 20, 2001 & November 11-12, 2002*

| Sample I.D. | Method Detection Limit | Chemical Abstract Service Number (CAS #) | Maximum Concentration | Sample Location | Depth (ft.) | Part 201 Commercial III Drinking Water Criteria | Part 201 Groundwater Surface Water Interface Protection Criteria | Part 201 Commercial III Indoor Air Inhalation Criteria | Part 201 Groundwater Direct Contact Criteria |
|---|---|---|---|---|---|---|---|---|---|
| VOLATILE ORGANIC COMPOUNDS (VOCs) | | | | | | | | | |
| Ethylbenzene | 1.0 | 100414 | 40 | SB-1 | 11-13' | 74 | 18 | 170,000 {S} | 170,000 {S} |
| Total Xylenes | NA | 1330207 | 17 | SB-1 | 11-13' | 281 | 26 | 150,000 {S} | 150,000 {S} |
| 1,2,4-Trimethylbenzene | 1.0 | 95636 | 16 | SB-1 | 11-13' | 43 | 57 | 55,600 {S} | 55,600 {S} |
| 1,3,5-Trimethylbenzene | 1.0 | 108678 | 19 | SB-1 | 11-13' | 72 | NA | 61,600 {S} | 61,600 {S} |
| cis-1,2-Dichloroethylene | 1.0 | 156592 | 47 | SB-8 | 12-14' | 70 | 630 | 210,000 | 200,000 |
| Tetrachloroethylene | 1.0 | 127184 | 10,400 | SB-8 | 12-14' | 5.0 | 45 | 170,000 | 11,000 |
| 1,1,1-Trichloroethane | 1.0 | 71556 | 3.0 | SB-8 | 12-14' | 200 | 200 | 1,200,000 {S} | 1,200,000 {S} |
| Trichloroethylene | 1.0 | 79016 | 192 | SB-9 | 12-14' | 5.0 | 200 | 22,000 | 22,000 |
| 1,1-Dichloroethylene | 1.0 | 75354 | 26 | SB-7 | 12-14' | 7.0 | 65 | 1,500 | 11,000 |
| All other VOCs | N/A | N/A | < | N/A | N/A | N/A | N/A | N/A | N/A |

**NOTES:**

1. Presented in ug/L (ppb)
2. < = Less than method detection limit
3. N/A = Not Applicable
4. {S} = Criterion defaults to the chemical-specific water solubility limit
5. NA = Not Available

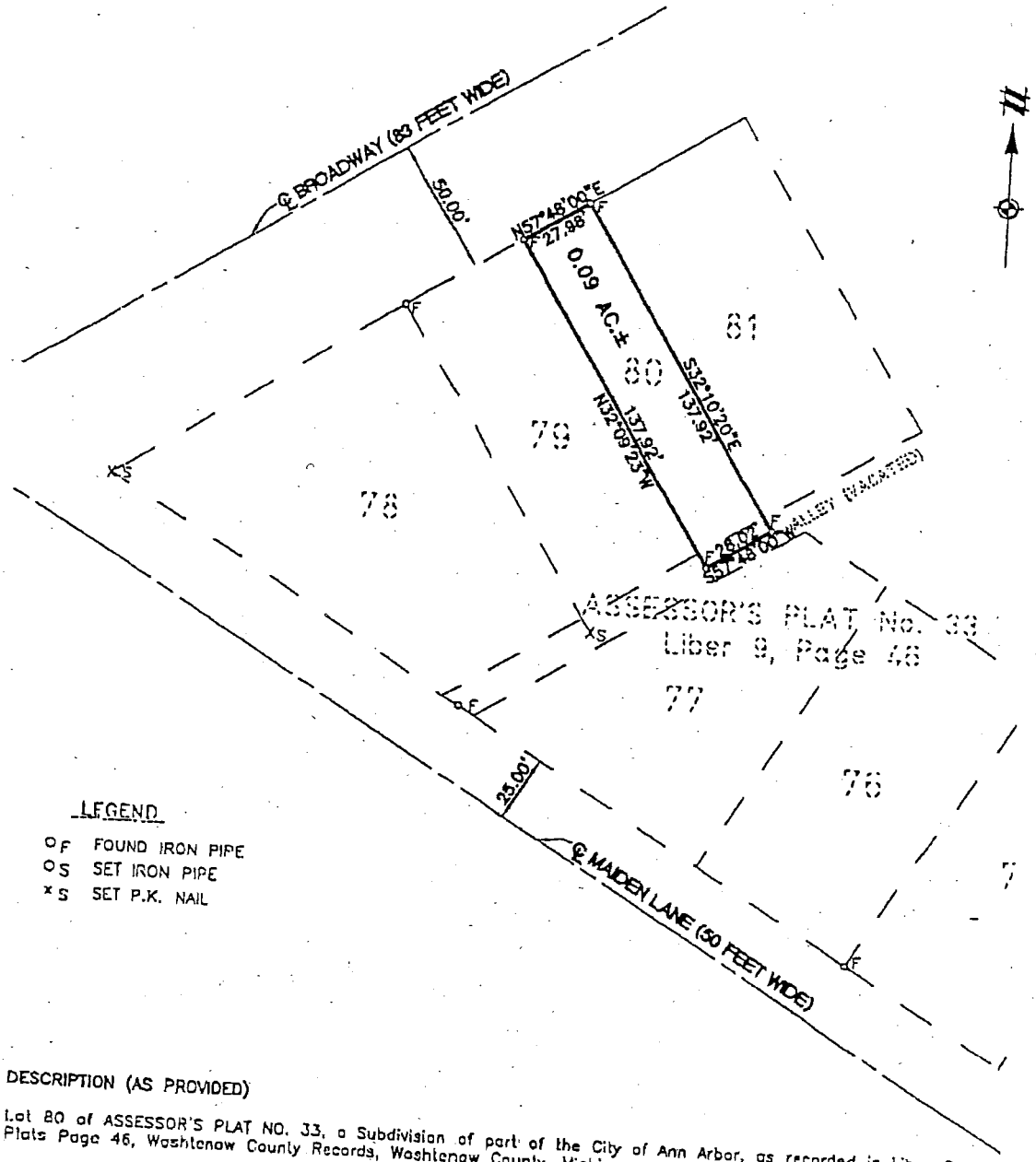


LEGEND

- °F FOUND IRON PIPE
- °S SET IRON PIPE
- ×S SET P.K. NAIL

DESCRIPTION (AS PROVIDED)

Lot 80 of ASSESSOR'S PLAT NO. 33, a Subdivision of part of the City of Ann Arbor, as recorded in Liber 9, of Plats Page 46, Washtenaw County Records, Washtenaw County, Michigan.

ALSO DESCRIBED AS:

BEGINNING at the Northwest corner of Lot 80, Assessor's Plat No. 33, a Subdivision of part of the City of Ann Arbor, as recorded in Liber 9, of Plats Page 46, Washtenaw County Records, Washtenaw County, Michigan; thence N57°48'00"E 27.98 feet along the North line of said Lot 80 and the South right-of-way line of Broadway Ave. (83 feet wide); thence S32°10'20"E 137.92 feet along the Northeasterly line of said Lot 80; thence S57°48'00"W 28.02 feet; thence N32°09'23"W 137.92 feet along the Southwesterly line of said Lot 80, containing 0.09 acres of land, more or less, being part of Lot 80 of said Assessor's Plat No. 33, being subject to any easements and restrictions of record, if any.

CLIENT
PETER T. ALLEN & ASSOC.

BOUNDARY SURVEY OF LOT 80,
ASSESSOR'S PLAT No. 33
LIBER 9, PAGE 46 OF PLATS,
WASHTENAW COUNTY RECORDS

SECTION 21 TOWN 2 SOUTH, RANGE 6 EAST
ANN ARBOR TOWNSHIP
WASHTENAW COUNTY

SCALE:
1 INCH = 50 FEET 0 25 50

PROFESSIONAL SURVEYOR NO. 16723

ATWELL-HICKS, INC.
Civil Engineering - Surveying
Planning - Environmental Services
Ann Arbor, MI 734 994 4000 | Brighton, MI 810 225 5005 | Washington Twp., MI 810 786 9800 | Naperville, IL 630 577 0800

| | |
|---|---|
| DATE: | 02-11-02 |
| JOB: 300056.10 | CAD 300056SU01 |
| DR. DSB | CH. MCB |
| BOOK 135 | PG. 15 |
| SHEET 3 | OF 3 |
| FILE NO. LV-5222-42-3 | |

# TABLE 1
## SOIL ANALYTICAL SUMMARY, HISTORICAL VOC DATA
## 1120 BROADWAY AND ADJACENT PROPERTY
## ANN ARBOR, MICHIGAN

Michigan Act 451, Part 201 Residential and Commercial I

| Sample Location | | | | | AHI-SB-7 | AHI-SB-8 | AHI-SB-8 | AHI-SB-9 | AHI-SB-10 | GP-1 | GP-1 | GP-2 | GP-2 | GP-3 | GP-3 | GP-4 | GP-4 | GP-5 | GP-5 | GP-6 | GP-6 | GP-7(a) | GP-7(b) | GP-8 | GP-8 | GP-9 | GP-9 | GP-10 | GP-10 | GP-11 | GP-11 | GP-12 | GP-12 | GP-13 | GP-13 | GP-14 | GP-14 | GP-15 |
|---|---|---|---|---|---|---|---|---|---|---|---|---|---|---|---|---|---|---|---|---|---|---|---|---|---|---|---|---|---|---|---|---|---|---|---|---|---|---|
| Sample Identification | | Residential Drinking Water Protection | Soil Volatilization to Indoor Air Inhalation | Direct Contact Criteria | AHI-SB-7-12 | AHI-SB-8-12 | AHI-SB-8-24 | AHI-SB-9-12 | AHI-SB-10-12 | GP-1 | GP-1 | GP-2 | GP-2 | GP-3 | GP-3 | GP-4 | GP-4 | GP-5 | GP-5 | GP-6 | GP-6 | GP-7(a) | GP-7(b) | GP-8 | GP-8 | GP-9 | GP-9 | GP-10 | GP-10 | GP-11 | GP-11 | GP-12 | GP-12 | GP-13 | GP-13 | GP-14 | GP-14 | GP-15 |
| Sample Date | | | | | 11/20/2001 | 11/20/2001 | 11/20/2001 | 11/20/2001 | 11/20/2001 | 7/11/2002 | 7/11/2002 | 7/11/2002 | 7/11/2002 | 7/12/2002 | 7/12/2002 | 7/15/2002 | 7/15/2002 | 7/15/2002 | 7/16/2002 | 7/16/2002 | 7/16/2002 | 7/17/2002 | 7/17/2002 | 7/17/2002 | 7/17/2002 | 7/18/2002 | 7/18/2002 | 7/18/2002 | 7/18/2002 | 7/18/2002 | 7/18/2002 | 7/18/2002 | 7/18/2002 | 7/18/2002 | 7/18/2002 | 7/19/2002 | 7/19/2002 | 7/19/2002 |
| Sample Depth (ft bgs) | | | | | (0-12) | (0-12) | (0-24) | (0-12) | (0-12) | (12-13) | (13-14) | (13-14) | (14-15) | (10-11) | (11-12) | (12-13) | (8-9) | (12-13) | (4-5) | (11-12) | (12-13) | (5-10) | (5-10) | (11-12) | (9-10) | (12-13) | (14-15) | (12-13) | (9-10) | (11-12) | (9-10) | (11-12) | (9-10) | (11-12) | (9-10) | (15-16) | (9-10) | (12-13) |
| Sample Type | Units | a | b | c | | | | | | | | | | | | | | | | | | | | | | | | | | | | | | | | | | |
| VOCs | | | | | | | | | | | | | | | | | | | | | | | | | | | | | | | | | | | | | | |
| 1,1,1,2-Tetrachloroethane | ug/Kg | 1500 | 6200 | 440000 | ND(100) | ND(100) | ND(100) | ND(100) | ND(100) | ND(50) | ND(53) | ND(240) | ND(200) | ND(49) | ND(54) | ND(200) | ND(57) | ND(1100) | ND(110) | ND(520) | ND(540) | ND(53) | ND(51) | ND(52) | ND(53) | ND(530) | ND(520) | ND(520) | ND(52) | ND(55) | ND(72) | ND(55) | ND(52) | ND(88) | ND(52) | ND(54) | ND(54) | ND(57) |
| 1,1,1-Trichloroethane | ug/Kg | 4000 | 250000 | 460000 | ND(50) | ND(50) | ND(50) | ND(50) | ND(50) | ND(50) | ND(53) | ND(240) | ND(200) | ND(49) | ND(54) | ND(200) | ND(57) | ND(1100) | ND(110) | ND(520) | ND(540) | ND(53) | ND(51) | ND(52) | ND(53) | ND(530) | ND(520) | ND(520) | ND(52) | ND(55) | ND(72) | ND(55) | ND(52) | ND(88) | ND(52) | ND(54) | ND(54) | ND(57) |
| 1,1,2,2-Tetrachloroethane | ug/Kg | 170 | 4300 | 53000 | ND(100) | ND(100) | ND(100) | ND(100) | ND(100) | ND(50) | ND(53) | ND(240) | ND(200) | ND(49) | ND(54) | ND(200) | ND(57) | ND(1100) | ND(110) | ND(520) | ND(540) | ND(53) | ND(51) | ND(52) | ND(53) | ND(530) | ND(520) | ND(520) | ND(52) | ND(55) | ND(72) | ND(55) | ND(52) | ND(88) | ND(52) | ND(54) | ND(54) | ND(57) |
| 1,1,2-Trichloroethane | ug/Kg | 100 | 4600 | 180000 | ND(50) | ND(50) | ND(50) | ND(50) | ND(50) | ND(50) | ND(53) | ND(240) | ND(200) | ND(49) | ND(54) | ND(200) | ND(57) | ND(1100) | ND(110) | ND(520) | ND(540) | ND(53) | ND(51) | ND(52) | ND(53) | ND(530) | ND(520) | ND(520) | ND(52) | ND(55) | ND(72) | ND(55) | ND(52) | ND(88) | ND(52) | ND(54) | ND(54) | ND(57) |
| 1,1-Dichloroethane | ug/kg | 18000 | 230000 | 890000 | ND(50) | ND(50) | ND(50) | ND(50) | ND(50) | – | – | – | – | – | – | – | – | – | – | – | – | – | – | – | – | – | – | – | – | – | – | – | – | – | – | – | – | – |
| 1,1-Dichloroethene | ug/Kg | 140 | 62 | 200000 | ND(50) | ND(50) | ND(50) | ND(50) | ND(50) | ND(50) | ND(53) | ND(240) | ND(200) | ND(49) | ND(54) | ND(200) | ND(57) | ND(1100) | ND(110) | ND(520) | ND(540) | ND(53) | ND(51) | ND(52) | ND(53) | ND(530) | ND(520) | ND(520) | ND(52) | ND(55) | ND(72) | ND(55) | ND(52) | ND(88) | ND(52) | ND(54) | ND(54) | ND(57) |
| 1,1-Dichloropropene | ug/kg | | | | ND(50) | ND(50) | ND(50) | ND(50) | ND(50) | – | – | – | – | – | – | – | – | – | – | – | – | – | – | – | – | – | – | – | – | – | – | – | – | – | – | – | – | – |
| 1,2,3-Trichlorobenzene | ug/Kg | | | | ND(330) | ND(330) | ND(330) | ND(330) | ND(330) | ND(250) | ND(260) | ND(1200) | ND(980) | ND(250) | ND(270) | ND(1000) | ND(290) | ND(5400) | ND(550) | ND(2600) | ND(2700) | ND(270) | ND(260) | ND(260) | ND(270) | ND(2600) | ND(2600) | ND(2600) | ND(260) | ND(280) | ND(360) | ND(280) | ND(260) | ND(440) | ND(260) | ND(270) | ND(270) | ND(280) |
| 1,2,3-Trichloropropane | ug/Kg | 840 | ID | 830000 | ND(100) | ND(100) | ND(100) | ND(100) | ND(100) | ND(50) | ND(53) | ND(240) | ND(200) | ND(49) | ND(54) | ND(200) | ND(57) | ND(1100) | ND(110) | ND(520) | ND(540) | ND(53) | ND(51) | ND(52) | ND(53) | ND(530) | ND(520) | ND(520) | ND(52) | ND(55) | ND(72) | ND(55) | ND(52) | ND(88) | ND(52) | ND(54) | ND(54) | ND(57) |
| 1,2,4-Trichlorobenzene | ug/Kg | 4200 | 1100000 | 990000 | ND(330) | ND(330) | ND(330) | ND(330) | ND(330) | ND(250) | ND(260) | ND(1200) | ND(980) | ND(250) | ND(270) | ND(1000) | ND(290) | ND(5400) | ND(550) | ND(2600) | ND(2700) | ND(270) | ND(260) | ND(260) | ND(270) | ND(2600) | ND(2600) | ND(2600) | ND(260) | ND(280) | ND(360) | ND(280) | ND(260) | ND(440) | ND(260) | ND(270) | ND(270) | ND(280) |
| 1,2,4-Trimethylbenzene | ug/Kg | 2100 | 110000 | 110000 | ND(100) | ND(100) | ND(100) | ND(100) | ND(100) | ND(50) | ND(53) | ND(240) | ND(200) | ND(49) | ND(54) | ND(200) | ND(57) | ND(1100) | ND(110) | ND(520) | ND(540) | ND(53) | ND(51) | ND(52) | ND(53) | ND(530) | ND(520) | ND(520) | ND(52) | ND(55) | ND(72) | ND(55) | ND(52) | ND(88) | ND(52) | ND(54) | ND(54) | ND(57) |
| 1,2-Dibromo-3-chloropropane (DBCP) | ug/Kg | 4 | 1200 | 1200 | ND(250) | ND(250) | ND(250) | ND(250) | ND(250) | ND(250) | ND(260) | ND(1200) | ND(980) | ND(250) | ND(270) | ND(1000) | ND(290) | ND(5400) | ND(550) | ND(2600) | ND(2700) | ND(270) | ND(260) | ND(260) | ND(270) | ND(2600) | ND(2600) | ND(2600) | ND(260) | ND(280) | ND(360) | ND(280) | ND(260) | ND(440) | ND(260) | ND(270) | ND(270) | ND(280) |
| 1,2-Dibromoethane (Ethylene Dibromide) | ug/Kg | 250 | 670 | 250 | ND(250) | ND(250) | ND(250) | ND(250) | ND(250) | ND(50) | ND(53) | ND(240) | ND(200) | ND(49) | ND(54) | ND(200) | ND(57) | ND(1100) | ND(110) | ND(520) | ND(540) | ND(53) | ND(51) | ND(52) | ND(53) | ND(530) | ND(520) | ND(520) | ND(52) | ND(55) | ND(72) | ND(55) | ND(52) | ND(88) | ND(52) | ND(54) | ND(54) | ND(57) |
| 1,2-Dichlorobenzene | ug/Kg | 14000 | 210000 | 210000 | ND(100) | ND(100) | ND(100) | ND(100) | ND(100) | ND(50) | ND(53) | ND(240) | ND(200) | ND(49) | ND(54) | ND(200) | ND(57) | ND(1100) | ND(110) | ND(520) | ND(540) | ND(53) | ND(51) | ND(52) | ND(53) | ND(530) | ND(520) | ND(520) | ND(52) | ND(55) | ND(72) | ND(55) | ND(52) | ND(88) | ND(52) | ND(54) | ND(54) | ND(57) |
| 1,2-Dichloroethane | ug/Kg | 100 | 2100 | 91000 | ND(50) | ND(50) | ND(50) | ND(50) | ND(50) | ND(50) | ND(53) | ND(240) | ND(200) | ND(49) | ND(54) | ND(200) | ND(57) | ND(1100) | ND(110) | ND(520) | ND(540) | ND(53) | ND(51) | ND(52) | ND(53) | ND(530) | ND(520) | ND(520) | ND(52) | ND(55) | ND(72) | ND(55) | ND(52) | ND(88) | ND(52) | ND(54) | ND(54) | ND(57) |
| 1,2-Dichloropropane | ug/Kg | 100 | 4000 | 140000 | ND(50) | ND(50) | ND(50) | ND(50) | ND(50) | ND(50) | ND(53) | ND(240) | ND(200) | ND(49) | ND(54) | ND(200) | ND(57) | ND(1100) | ND(110) | ND(520) | ND(540) | ND(53) | ND(51) | ND(52) | ND(53) | ND(530) | ND(520) | ND(520) | ND(52) | ND(55) | ND(72) | ND(55) | ND(52) | ND(88) | ND(52) | ND(54) | ND(54) | ND(57) |
| 1,3,5-Trimethylbenzene | ug/Kg | 1800 | 94000 | 94000 | ND(100) | ND(100) | ND(100) | ND(100) | ND(100) | ND(50) | ND(53) | ND(240) | ND(200) | ND(49) | ND(54) | ND(200) | ND(57) | ND(1100) | ND(110) | ND(520) | ND(540) | ND(53) | ND(51) | ND(52) | ND(53) | ND(530) | ND(520) | ND(520) | ND(52) | ND(55) | ND(72) | ND(55) | ND(52) | ND(88) | ND(52) | ND(54) | ND(54) | ND(57) |
| 1,3-Dichlorobenzene | ug/Kg | 170 | ID | 170000 | ND(100) | ND(100) | ND(100) | ND(100) | ND(100) | ND(50) | ND(53) | ND(240) | ND(200) | ND(49) | ND(54) | ND(200) | ND(57) | ND(1100) | ND(110) | ND(520) | ND(540) | ND(53) | ND(51) | ND(52) | ND(53) | ND(530) | ND(520) | ND(520) | ND(52) | ND(55) | ND(72) | ND(55) | ND(52) | ND(88) | ND(52) | ND(54) | ND(54) | ND(57) |
| 1,3-Dichloropropane | ug/kg | | | | ND(50) | ND(50) | ND(50) | ND(50) | ND(50) | – | – | – | – | – | – | – | – | – | – | – | – | – | – | – | – | – | – | – | – | – | – | – | – | – | – | – | – | – |
| 1,4-Dichlorobenzene | ug/Kg | 1700 | 19000 | 400000 | ND(100) | ND(100) | ND(100) | ND(100) | ND(100) | ND(50) | ND(53) | ND(240) | ND(200) | ND(49) | ND(54) | ND(200) | ND(57) | ND(1100) | ND(110) | ND(520) | ND(540) | ND(53) | ND(51) | ND(52) | ND(53) | ND(530) | ND(520) | ND(520) | ND(52) | ND(55) | ND(72) | ND(55) | ND(52) | ND(88) | ND(52) | ND(54) | ND(54) | ND(57) |
| 2,2-Dichloropropane | ug/kg | | | | ND(50) | ND(50) | ND(50) | ND(50) | ND(50) | – | – | – | – | – | – | – | – | – | – | – | – | – | – | – | – | – | – | – | – | – | – | – | – | – | – | – | – | – |
| 2-Butanone (Methyl Ethyl Ketone) | ug/Kg | 260000 | 27000000 | 27000000 | – | – | – | – | – | ND(250) | ND(260) | ND(1200) | ND(980) | ND(250) | ND(270) | ND(1000) | ND(290) | ND(5400) | ND(550) | ND(2600) | ND(540) | ND(270) | ND(260) | ND(260) | ND(270) | ND(2600) | ND(2600) | ND(2600) | ND(260) | ND(280) | ND(360) | ND(280) | ND(260) | ND(440) | ND(260) | ND(270) | ND(270) | ND(280) |
| 2-Chloroethyl vinyl ether | ug/kg | ID | ID | ID | – | – | – | – | – | – | – | – | – | – | – | – | – | – | – | – | – | – | – | – | – | – | – | – | – | – | – | – | – | – | – | – | – | – |
| 2-Chlorotoluene | ug/kg | 3300 | 270000 | 500000 | ND(50) | ND(50) | ND(50) | ND(50) | ND(50) | – | – | – | – | – | – | – | – | – | – | – | – | – | – | – | – | – | – | – | – | – | – | – | – | – | – | – | – | – |
| 2-Hexanone | ug/Kg | 20000 | 990000 | 2500000 | – | – | – | – | – | ND(250) | ND(260) | ND(1200) | ND(980) | ND(250) | ND(270) | ND(1000) | ND(290) | ND(5400) | ND(550) | ND(2600) | ND(2700) | ND(270) | ND(260) | ND(260) | ND(270) | ND(2600) | ND(2600) | ND(2600) | ND(260) | ND(280) | ND(360) | ND(280) | ND(260) | ND(440) | ND(260) | ND(270) | ND(270) | ND(280) |
| 2-Methylnaphthalene | ug/Kg | 57000 | ID | 8100000 | ND(250) | ND(250) | ND(250) | ND(250) | ND(250) | 340 | ND(260) | ND(1200) | ND(980) | ND(250) | ND(270) | ND(1000) | ND(290) | ND(5400) | ND(550) | ND(2600) | ND(2700) | ND(270) | ND(260) | ND(260) | ND(270) | ND(2600) | ND(2600) | ND(2600) | ND(260) | ND(280) | ND(360) | ND(280) | ND(260) | ND(440) | ND(260) | ND(270) | ND(270) | ND(280) |
| 2-Phenylbutane (sec-Butylbenzene) | ug/Kg | 1600 | ID | 2500000 | ND(50) | ND(50) | ND(50) | ND(50) | ND(50) | ND(50) | 60 | ND(240) | ND(200) | ND(49) | ND(54) | ND(200) | ND(57) | ND(1100) | ND(110) | ND(520) | ND(540) | ND(53) | ND(51) | ND(52) | ND(53) | ND(530) | ND(520) | ND(520) | ND(52) | ND(55) | ND(72) | ND(55) | ND(52) | ND(88) | ND(52) | ND(54) | ND(54) | ND(57) |
| 4-Chlorotoluene | ug/kg | | | | ND(50) | ND(50) | ND(50) | ND(50) | ND(50) | – | – | – | – | – | – | – | – | – | – | – | – | – | – | – | – | – | – | – | – | – | – | – | – | – | – | – | – | – |
| 4-Methyl-2-Pentanone (Methyl Isobutyl Ketone) | ug/Kg | 36000 | 2700000 | 2700000 | – | – | – | – | – | ND(250) | ND(260) | ND(1200) | ND(980) | ND(250) | ND(270) | ND(1000) | ND(290) | ND(5400) | ND(550) | ND(2600) | ND(2700) | ND(270) | ND(260) | ND(260) | ND(270) | ND(2600) | ND(2600) | ND(2600) | ND(260) | ND(280) | ND(360) | ND(280) | ND(260) | ND(440) | ND(260) | ND(270) | ND(270) | ND(280) |
| Acetone | ug/Kg | 15000 | 110000000 | 23000000 | – | – | – | – | – | ND(1000) | ND(1100) | ND(4700) | ND(3900) | ND(980) | ND(1100) | ND(4000) | ND(1100) | ND(22000) | ND(2200) | ND(10000) | ND(11000) | ND(1100) | ND(1000) | ND(1000) | ND(1100) | ND(11000) | ND(10000) | ND(10000) | ND(1000) | ND(1100) | ND(1400) | ND(1100) | ND(1000) | ND(1800) | ND(1000) | ND(1100) | ND(1100) | ND(1100) |
| Acrolein | ug/kg | 2400 | 410 | 3600000 | – | – | – | – | – | – | – | – | – | – | – | – | – | – | – | – | – | – | – | – | – | – | – | – | – | – | – | – | – | – | – | – | – | – |
| Acrylonitrile | ug/Kg | 52 | 6600 | 16000 | – | – | – | – | – | ND(250) | ND(260) | ND(1200) | ND(980) | ND(250) | ND(270) | ND(1000) | ND(290) | ND(5400) | ND(550) | ND(2600) | ND(2700) | ND(270) | ND(260) | ND(260) | ND(270) | ND(2600) | ND(2600) | ND(2600) | ND(260) | ND(280) | ND(360) | ND(280) | ND(260) | ND(440) | ND(260) | ND(270) | ND(270) | ND(280) |
| Benzene | ug/Kg | 100 | 1600 | 180000 | ND(50) | ND(50) | ND(50) | ND(50) | ND(50) | ND(50) | ND(53) | ND(240) | ND(200) | ND(49) | ND(54) | ND(200) | ND(57) | ND(1100) | ND(110) | ND(520) | ND(540) | ND(53) | ND(51) | ND(52) | ND(53) | ND(530) | ND(520) | ND(520) | ND(52) | ND(55) | ND(72) | ND(55) | ND(52) | ND(88) | ND(52) | ND(54) | ND(54) | ND(57) |
| Bromobenzene | ug/Kg | 550 | 310000 | 540000 | ND(100) | ND(100) | ND(100) | ND(100) | ND(100) | ND(50) | ND(53) | ND(240) | ND(200) | ND(49) | ND(54) | ND(200) | ND(57) | ND(1100) | ND(110) | ND(520) | ND(540) | ND(53) | ND(51) | ND(52) | ND(53) | ND(530) | ND(520) | ND(520) | ND(52) | ND(55) | ND(72) | ND(55) | ND(52) | ND(88) | ND(52) | ND(54) | ND(54) | ND(57) |
| Bromodichloromethane | ug/Kg | 2000 | 1200 | 110000 | ND(100) | ND(100) | ND(100) | ND(100) | ND(100) | ND(50) | ND(53) | ND(240) | ND(200) | ND(49) | ND(54) | ND(200) | ND(57) | ND(1100) | ND(110) | ND(520) | ND(540) | ND(53) | ND(51) | ND(52) | ND(53) | ND(530) | ND(520) | ND(520) | ND(52) | ND(55) | ND(72) | ND(55) | ND(52) | ND(88) | ND(52) | ND(54) | ND(54) | ND(57) |
| Bromoform | ug/Kg | 2000 | 150000 | 820000 | ND(100) | ND(100) | ND(100) | ND(100) | ND(100) | ND(50) | ND(53) | ND(240) | ND(200) | ND(49) | ND(54) | ND(200) | ND(57) | ND(1100) | ND(110) | ND(520) | ND(540) | ND(53) | ND(51) | ND(52) | ND(53) | ND(530) | ND(520) | ND(520) | ND(52) | ND(55) | ND(72) | ND(55) | ND(52) | ND(88) | ND(52) | ND(54) | ND(54) | ND(57) |
| Bromomethane (Methyl Bromide) | ug/Kg | 200 | 860 | 320000 | ND(250) | ND(250) | ND(250) | ND(250) | ND(250) | ND(250) | ND(260) | ND(1200) | ND(980) | ND(250) | ND(270) | ND(1000) | ND(290) | ND(5400) | ND(550) | ND(2600) | ND(2700) | ND(270) | ND(260) | ND(260) | ND(270) | ND(2600) | ND(2600) | ND(2600) | ND(260) | ND(280) | ND(360) | ND(280) | ND(260) | ND(440) | ND(260) | ND(270) | ND(270) | ND(280) |
| Carbon disulfide | ug/Kg | 16000 | 76000 | 280000 | – | – | – | – | – | ND(50) | ND(53) | ND(240) | ND(200) | ND(49) | ND(54) | ND(200) | ND(57) | ND(1100) | ND(110) | ND(520) | ND(540) | ND(53) | ND(51) | ND(52) | ND(53) | ND(530) | ND(520) | ND(520) | ND(52) | ND(55) | ND(72) | ND(55) | ND(52) | ND(88) | ND(52) | ND(54) | ND(54) | ND(57) |
| Carbon tetrachloride | ug/Kg | 100 | 190 | 96000 | ND(50) | ND(50) | ND(50) | ND(50) | ND(50) | ND(50) | ND(53) | ND(240) | ND(200) | ND(49) | ND(54) | ND(200) | ND(57) | ND(1100) | ND(110) | ND(520) | ND(540) | ND(53) | ND(51) | ND(52) | ND(53) | ND(530) | ND(520) | ND(520) | ND(52) | ND(55) | ND(72) | ND(55) | ND(52) | ND(88) | ND(52) | ND(54) | ND(54) | ND(57) |
| Chlorobenzene | ug/Kg | 2000 | 120000 | 260000 | ND(50) | ND(50) | ND(50) | ND(50) | ND(50) | ND(50) | ND(53) | ND(240) | ND(200) | ND(49) | ND(54) | ND(200) | ND(57) | ND(1100) | ND(110) | ND(520) | ND(540) | ND(53) | ND(51) | ND(52) | ND(53) | ND(530) | ND(520) | ND(520) | ND(52) | ND(55) | ND(72) | ND(55) | ND(52) | ND(88) | ND(52) | ND(54) | ND(54) | ND(57) |
| Chlorobromomethane | ug/Kg | | | | ND(100) | ND(100) | ND(100) | ND(100) | ND(100) | ND(50) | ND(53) | ND(240) | ND(200) | ND(49) | ND(54) | ND(200) | ND(57) | ND(1100) | ND(110) | ND(520) | ND(2700) | ND(53) | ND(51) | ND(52) | ND(53) | ND(530) | ND(520) | ND(520) | ND(52) | ND(55) | ND(72) | ND(55) | ND(52) | ND(88) | ND(52) | ND(54) | ND(54) | ND(57) |
| Chloroethane | ug/Kg | 8600 | 950000 | 950000 | ND(250) | ND(250) | ND(250) | ND(250) | ND(250) | ND(250) | ND(260) | ND(1200) | ND(980) | ND(250) | ND(270) | ND(1000) | ND(290) | ND(5400) | ND(550) | ND(2600) | ND(2700) | ND(270) | ND(260) | ND(260) | ND(270) | ND(2600) | ND(2600) | ND(2600) | ND(260) | ND(280) | ND(360) | ND(280) | ND(260) | ND(440) | ND(260) | ND(270) | ND(270) | ND(280) |
| Chloroform (Trichloromethane) | ug/Kg | 2000 | 7200 | 1200000 | ND(50) | ND(50) | ND(50) | ND(50) | ND(50) | ND(50) | ND(53) | ND(240) | ND(200) | ND(49) | ND(54) | ND(200) | ND(57) | ND(1100) | ND(110) | ND(520) | ND(540) | ND(53) | ND(51) | ND(52) | ND(53) | ND(530) | ND(520) | ND(520) | ND(52) | ND(55) | ND(72) | ND(55) | ND(52) | ND(88) | ND(52) | ND(54) | ND(54) | ND(57) |
| Chloromethane (Methyl Chloride) | ug/Kg | 5200 | 2300 | 1100000 | ND(250) | ND(250) | ND(250) | ND(250) | ND(250) | ND(250) | ND(260) | ND(1200) | ND(980) | ND(250) | ND(270) | ND(1000) | ND(290) | ND(5400) | ND(550) | ND(2600) | ND(2700) | ND(270) | ND(260) | ND(260) | ND(270) | ND(2600) | ND(2600) | ND(2600) | ND(260) | ND(280) | ND(360) | ND(280) | ND(260) | ND(440) | ND(260) | ND(270) | ND(270) | ND(280) |
| cis-1,2-Dichloroethene | ug/Kg | 1400 | 22000 | 640000 | ND(50) | ND(50) | ND(50) | ND(50) | ND(50) | ND(50) | ND(53) | ND(240) | ND(200) | ND(49) | ND(54) | ND(200) | ND(57) | ND(1100) | ND(110) | ND(520) | ND(2700) | ND(270) | ND(51) | ND(52) | ND(270) | ND(530) | ND(520) | ND(520) | ND(52) | ND(55) | ND(72) | ND(55) | ND(52) | ND(88) | ND(52) | ND(54) | ND(54) | ND(57) |
| Cymene (p-Isopropyltoluene) | ug/Kg | | | | – | – | – | – | – | ND(50) | ND(53) | ND(240) | ND(200) | ND(49) | ND(54) | ND(200) | ND(57) | ND(1100) | ND(110) | ND(520) | ND(540) | ND(53) | ND(51) | ND(52) | ND(53) | ND(530) | ND(520) | ND(520) | ND(52) | ND(55) | ND(72) | ND(55) | ND(52) | ND(88) | ND(52) | ND(54) | ND(54) | ND(57) |
| Dibromochloromethane | ug/Kg | 2000 | 3900 | 110000 | ND(100) | ND(100) | ND(100) | ND(100) | ND(100) | ND(50) | ND(53) | ND(240) | ND(200) | ND(49) | ND(54) | ND(200) | ND(57) | ND(1100) | ND(110) | ND(520) | ND(540) | ND(53) | ND(51) | ND(52) | ND(53) | ND(530) | ND(520) | ND(520) | ND(52) | ND(55) | ND(72) | ND(55) | ND(52) | ND(88) | ND(52) | ND(54) | ND(54) | ND(57) |
| Dibromomethane | ug/Kg | 1600 | ID | 2000000 | ND(250) | ND(250) | ND(250) | ND(250) | ND(250) | ND(50) | ND(53) | ND(240) | ND(200) | ND(49) | ND(54) | ND(200) | ND(57) | ND(1100) | ND(110) | ND(520) | ND(540) | ND(53) | ND(51) | ND(52) | ND(53) | ND(530) | ND(520) | ND(520) | ND(52) | ND(55) | ND(72) | ND(55) | ND(52) | ND(88) | ND(52) | ND(54) | ND(54) | ND(57) |
| Dichlorodifluoromethane (CFC-12) | ug/Kg | 95000 | 900000 | 1000000 | ND(50) | ND(50) | ND(50) | ND(50) | ND(50) | ND(250) | ND(260) | ND(1200) | ND(980) | ND(250) | ND(270) | ND(1000) | ND(290) | ND(5400) | ND(550) | ND(2600) | ND(2700) | ND(270) | ND(260) | ND(260) | ND(270) | ND(2600) | ND(2600) | ND(2600) | ND(260) | ND(280) | ND(360) | ND(280) | ND(260) | ND(440) | ND(260) | ND(270) | ND(270) | ND(280) |
| Ethyl Ether | ug/Kg | 200 | 7400000 | 7400000 | – | – | – | – | – | ND(250) | ND(260) | ND(1200) | ND(980) | ND(250) | ND(270) | ND(1000) | ND(290) | ND(5400) | ND(550) | ND(2600) | ND(2700) | ND(270) | ND(260) | ND(260) | ND(270) | ND(2600) | ND(2600) | ND(2600) | ND(260) | ND(280) | ND(360) | ND(280) | ND(260) | ND(440) | ND(260) | ND(270) | ND(270) | ND(280) |
| Ethylbenzene | ug/Kg | 1500 | 87000 | 140000 | ND(50) | ND(50) | ND(50) | ND(50) | ND(50) | ND(50) | ND(53) | ND(240) | ND(200) | ND(49) | ND(54) | ND(20) | ND(57) | ND(1100) | ND(110) | ND(520) | ND(540) | ND(53) | ND(51) | ND(52) | ND(53) | ND(530) | ND(520) | ND(520) | ND(52) | ND(55) | ND(72) | ND(55) | ND(52) | ND(88) | ND(52) | ND(54) | ND(54) | ND(57) |
| Hexachlorobutadiene | ug/kg | 26000 | 130000 | 100000 | ND(100) | ND(100) | ND(100) | ND(100) | ND(100) | – | – | – | – | – | – | – | – | – | – | – | – | – | – | – | – | – | – | – | – | – | – | – | – | – | – | – | – | – |
| Hexachloroethane | ug/Kg | 430 | 40000 | 230000 | – | – | – | – | – | ND(50) | ND(53) | ND(240) | ND(200) | ND(49) | ND(54) | ND(200) | ND(57) | ND(1100) | ND(110) | ND(520) | ND(540) | ND(53) | ND(51) | ND(52) | ND(53) | ND(530) | ND(520) | ND(520) | ND(52) | ND(55) | ND(72) | ND(55) | ND(52) | ND(88) | ND(52) | ND(54) | ND(54) | ND(57) |
| Iodomethane | ug/Kg | | | | – | – | – | – | – | ND(50) | ND(53) | ND(240) | ND(200) | ND(49) | ND(54) | ND(200) | ND(57) | ND(1100) | ND(110) | ND(520) | ND(540) | ND(53) | ND(51) | ND(52) | ND(53) | ND(530) | ND(520) | ND(520) | ND(52) | ND(55) | ND(72) | ND(55) | ND(52) | ND(88) | ND(52) | ND(54) | ND(54) | ND(57) |
| Isopropylbenzene | ug/Kg | 91000 | 390000 | 390000 | ND(250) | ND(250) | ND(250) | ND(250) | ND(250) | ND(250) | ND(260) | ND(1200) | ND(980) | ND(250) | ND(270) | ND(1000) | ND(290) | ND(5400) | ND(550) | ND(2600) | ND(2700) | ND(270) | ND(260) | ND(260) | ND(270) | ND(2600) | ND(2600) | ND(2600) | ND(260) | ND(280) | ND(360) | ND(280) | ND(260) | ND(440) | ND(260) | ND(270) | ND(270) | ND(280) |
| Isopropyltoluene | ug/kg | | | | ND(100) | ND(100) | ND(100) | ND(100) | ND(100) | – | – | – | – | – | – | – | – | – | – | – | – | – | – | – | – | – | – | – | – | – | – | – | – | – | – | – | – | – |
| Methyl Tert Butyl Ether | ug/Kg | 800 | 5900000 | 1500000 | – | – | – | – | – | ND(50) | ND(53) | ND(240) | ND(200) | ND(49) | ND(54) | ND(200) | ND(57) | ND(1100) | ND(110) | ND(520) | ND(540) | ND(53) | ND(51) | ND(52) | ND(53) | ND(530) | ND(520) | ND(520) | ND(52) | ND(55) | ND(72) | ND(55) | ND(52) | ND(88) | ND(52) | ND(54) | ND(54) | ND(57) |
| Methylene chloride | ug/Kg | 100 | 45000 | 1300000 | ND(250) | ND(250) | ND(250) | ND(250) | ND(250) | ND(250) | ND(260) | ND(1200) | ND(980) | ND(250) | ND(270) | ND(1000) | ND(290) | ND(5400) | ND(550) | ND(2600) | ND(2700) | ND(270) | ND(260) | ND(260) | ND(270) | ND(2600) | ND(2600) | ND(2600) | ND(260) | ND(280) | ND(360) | ND(280) | ND(260) | ND(440) | ND(260) | ND(270) | ND(270) | ND(280) |
| Naphthalene | ug/Kg | 35000 | 250000 | 16000000 | ND(250) | ND(250) | ND(250) | ND(250) | ND(250) | ND(250) | ND(260) | ND(1200) | ND(980) | ND(250) | ND(270) | ND(1000) | ND(290) | ND(5400) | ND(550) | ND(2600) | ND(2700) | ND(270) | ND(260) | ND(260) | ND(270) | ND(2600) | ND(2600) | ND(2600) | ND(260) | ND(280) | ND(360) | ND(280) | ND(260) | ND(440) | ND(260) | ND(270) | ND(270) | ND(280) |
| n-Butylbenzene | ug/Kg | 1600 | ID | 2500000 | ND(50) | ND(50) | ND(50) | ND(50) | ND(50) | ND(50) | ND(53) | ND(240) | ND(200) | ND(49) | ND(54) | ND(200) | ND(57) | ND(1100) | ND(110) | ND(520) | ND(540) | ND(53) | ND(51) | ND(52) | ND(53) | ND(530) | ND(520) | ND(520) | ND(52) | ND(55) | ND(72) | ND(55) | ND(52) | ND(88) | ND(52) | ND(54) | ND(54) | ND(57) |
| n-Propylbenzene | ug/Kg | 1600 | ID | 2500000 | ND(100) | ND(100) | ND(100) | ND(100) | ND(100) | ND(50) | ND(53) | ND(240) | ND(200) | ND(49) | ND(54) | ND(200) | ND(57) | ND(1100) | ND(110) | ND(520) | ND(540) | ND(53) | ND(51) | ND(52) | ND(53) | ND(530) | ND(520) | ND(520) | ND(52) | ND(55) | ND(72) | ND(55) | ND(52) | ND(88) | ND(52) | ND(54) | ND(54) | ND(57) |
| Styrene | ug/Kg | 2700 | 250000 | 400000 | ND(50) | ND(50) | ND(50) | ND(50) | ND(50) | ND(50) | ND(53) | ND(240) | ND(200) | ND(49) | ND(54) | ND(200) | ND(57) | ND(1100) | ND(110) | ND(520) | ND(540) | ND(53) | ND(51) | ND(52) | ND(53) | ND(530) | ND(520) | ND(520) | ND(52) | ND(55) | ND(72) | ND(55) | ND(52) | ND(88) | ND(52) | ND(54) | ND(54) | ND(57) |
| tert-Butylbenzene | ug/Kg | 1600 | ID | 2500000 | ND(50) | ND(50) | ND(50) | ND(50) | ND(50) | ND(50) | ND(53) | ND(240) | ND(200) | ND(49) | ND(54) | ND(200) | ND(57) | ND(1100) | ND(110) | ND(520) | ND(540) | ND(53) | ND(51) | ND(52) | ND(53) | ND(530) | ND(520) | ND(520) | ND(52) | ND(55) | ND(72) | ND(55) | ND(52) | ND(88) | ND(52) | ND(54) | ND(54) | ND(57) |
| Tetrachloroethene | ug/Kg | 100 | 11000 | 88000 | 6840* | 163000* | 1320* | 76300* | 30700* | 11000* | 8800* | 2800* | 3100* | 21000* | 27000* | 8700* | 2900* | 46000* | 8700* | 26000* | 140000* | 120* | 160* | 380* | 95 | 25000* | 22000* | 13000* | 2500* | 5600* | 1700* | 1900* | 1800* | 5800* | 3200* | 2400* | 720* | 750* |
| Tetrahydrofuran | ug/Kg | 1900 | 1300000 | 2900000 | – | – | – | – | – | ND(250) | ND(260) | ND(1200) | ND(980) | ND(250) | ND(270) | ND(1000) | ND(290) | ND(5400) | ND(550) | ND(2600) | ND(540) | ND(270) | ND(260) | ND(260) | ND(270) | ND(2600) | ND(2600) | ND(2600) | ND(260) | ND(280) | ND(360) | ND(280) | ND(260) | ND(440) | ND(260) | ND(270) | ND(270) | ND(280) |
| Toluene | ug/Kg | 16000 | 250000 | 250000 | ND(100) | ND(100) | ND(100) | ND(100) | ND(100) | ND(50) | ND(53) | ND(240) | ND(200) | ND(49) | ND(54) | ND(200) | ND(57) | ND(1100) | ND(110) | ND(520) | ND(540) | ND(53) | ND(51) | ND(52) | ND(53) | ND(530) | ND(520) | ND(520) | ND(52) | ND(55) | ND(72) | ND(55) | ND(52) | 210 | ND(52) | ND(54) | ND(54) | ND(57) |
| trans-1,2-Dichloroethene | ug/Kg | 2000 | 23000 | 1400000 | ND(50) | ND(50) | ND(50) | ND(50) | ND(50) | ND(50) | ND(53) | ND(240) | ND(200) | ND(49) | ND(54) | ND(200) | ND(57) | ND(1100) | ND(110) | ND(520) | ND(540) | ND(53) | ND(51) | ND(52) | ND(53) | ND(530) | ND(520) | ND(520) | ND(52) | ND(55) | ND(72) | ND(55) | ND(52) | ND(88) | ND(52) | ND(54) | ND(54) | ND(57) |
| trans-1,4-Dichloro-2-butene | ug/Kg | | | | – | – | – | – | – | ND(50) | ND(53) | ND(240) | ND(200) | ND(49) | ND(54) | ND(200) | ND(57) | ND(1100) | ND(110) | ND(520) | ND(540) | ND(53) | ND(51) | ND(52) | ND(53) | ND(530) | ND(520) | ND(520) | ND(52) | ND(55) | ND(72) | ND(55) | ND(52) | ND(88) | ND(52) | ND(54) | ND(54) | ND(57) |
| Trichloroethene | ug/Kg | 100 | 7100 | 500000 | ND(50) | ND(50) | ND(50) | ND(50) | ND(50) | ND(50) | ND(53) | ND(240) | ND(200) | ND(49) | ND(54) | ND(200) | ND(57) | ND(1100) | ND(110) | ND(520) | ND(540) | ND(53) | ND(51) | ND(52) | ND(53) | ND(530) | ND(520) | ND(520) | ND(52) | ND(55) | ND(72) | ND(55) | ND(52) | ND(88) | ND(52) | ND(54) | ND(54) | ND(57) |
| Trichlorofluoromethane (CFC-11) | ug/Kg | 52000 | 560000 | 560000 | ND(100) | ND(100) | ND(100) | ND(100) | ND(100) | ND(50) | ND(53) | ND(240) | ND(200) | ND(49) | ND(54) | ND(200) | ND(57) | ND(1100) | ND(110) | ND(520) | ND(540) | ND(53) | ND(51) | ND(52) | ND(53) | ND(530) | ND(520) | ND(520) | ND(52) | ND(55) | ND(72) | ND(55) | ND(52) | ND(88) | ND(52) | ND(54) | ND(54) | ND(57) |
| Vinyl acetate | ug/kg | 13000 | 790000 | 2400000 | – | – | – | – | – | – | – | – | – | – | – | – | – | – | – | – | – | – | – | – | – | – | – | – | – | – | – | – | – | – | – | – | – | – |
| Vinyl chloride | ug/Kg | 40 | 270 | 3800 | ND(100) | ND(100) | ND(100) | ND(100) | ND(100) | ND(50) | ND(53) | ND(240) | ND(200) | ND(49) | ND(54) | ND(200) | ND(57) | ND(1100) | ND(110) | ND(520) | ND(540) | ND(53) | ND(51) | ND(52) | ND(53) | ND(530) | ND(520) | ND(520) | ND(52) | ND(55) | ND(72) | ND(55) | ND(52) | ND(88) | ND(52) | ND(54) | ND(54) | ND(57) |
| Xylene (total) | ug/Kg | 5600 | 150000 | 150000 | ND(150) | ND(150) | ND(150) | ND(150) | ND(150) | ND(100) | ND(110) | ND(470) | ND(390) | ND(49) | ND(110) | ND(400) | ND(110) | ND(2200) | ND(220) | ND(1000) | ND(1100) | ND(110) | ND(100) | ND(100) | ND(110) | ND(1100) | ND(1000) | ND(1000) | ND(100) | ND(110) | ND(140) | ND(110) | ND(100) | ND(180) | ND(100) | ND(110) | ND(110) | ND(110) |
| trans-1,3-Dichloropropene | ug/Kg | | | | ND(50) | ND(50) | ND(50) | ND(50) | ND(50) | ND(50) | ND(53) | ND(240) | ND(200) | ND(49) | ND(54) | ND(200) | ND(57) | ND(1100) | ND(110) | ND(520) | ND(540) | ND(53) | ND(51) | ND(52) | ND(53) | ND(530) | ND(520) | ND(520) | ND(52) | ND(55) | ND(72) | ND(55) | ND(52) | ND(88) | ND(52) | ND(54) | ND(54) | ND(57) |
| cis-1,3-Dichloropropene | ug/Kg | | | | ND(50) | ND(50) | ND(50) | ND(50) | ND(50) | ND(50) | ND(53) | ND(240) | ND(200) | ND(49) | ND(54) | ND(200) | ND(57) | ND(1100) | ND(110) | ND(520) | ND(540) | ND(53) | ND(51) | ND(52) | ND(53) | ND(530) | ND(520) | ND(520) | ND(52) | ND(55) | ND(72) | ND(55) | ND(52) | ND(88) | ND(52) | ND(54) | ND(54) | ND(57) |
| 1,3-Dichloropropene (total) | ug/Kg | 170 | 1000 | 10000 | ND(50) | ND(50) | ND(50) | ND(50) | ND(50) | ND(50) | ND(53) | ND(240) | ND(200) | ND(49) | ND(54) | ND(200) | ND(57) | ND(1100) | ND(110) | ND(520) | ND(540) | ND(53) | ND(51) | ND(52) | ND(53) | ND(530) | ND(520) | ND(520) | ND(52) | ND(55) | ND(72) | ND(55) | ND(52) | ND(88) | ND(52) | ND(54) | ND(54) | ND(57) |

TABLE 1
SOIL ANALYTICAL SUMMARY, HISTORICAL VOC DATA
1120 BROADWAY AND ADJACENT PROPERTY
ANN ARBOR, MICHIGAN

| Sample Location | | GP-15 | GP-16 | GP-16 | GP-17 | GP-17 | GP-18 | GP-18 | GP-19 | GP-19 | GP-20 | GP-20 |
|---|---|---|---|---|---|---|---|---|---|---|---|---|
| Sample Identification | | GP-15 | GP-16 | GP-16 | GP-17 | GP-17 | GP-18 | GP-18 | GP-19 | GP-19 | GP-20 | GP-20 |
| Sample Date | | 7/19/2002 | 7/19/2002 | 7/19/2002 | 7/19/2002 | 7/19/2002 | 7/22/2002 | 7/22/2002 | 7/22/2002 | 7/22/2002 | 7/23/2002 | 7/23/2002 |
| Sample Depth (ft bgs) | | (9-10) | (10-15) | (9-10) | (10-11) | (9-10) | (11-12) | (12-13) | (10-11) | (9-10) | (8-9) | (9-10) |
| Sample Type | | | | | | | | | | | | |
| *VOCs* | *Units* | | | | | | | | | | | |
| 1,1,1,2-Tetrachloroethane | ug/Kg | ND(60) | ND(57) | ND(54) | ND(54) | ND(52) | ND(57) | ND(61) | ND(60) | ND(54) | ND(53) | ND(52) |
| 1,1,1-Trichloroethane | ug/Kg | ND(60) | ND(57) | ND(54) | ND(54) | ND(52) | ND(57) | ND(61) | ND(60) | ND(54) | ND(53) | ND(52) |
| 1,1,2,2-Tetrachloroethane | ug/Kg | ND(60) | ND(57) | ND(54) | ND(54) | ND(52) | ND(57) | ND(61) | ND(60) | ND(54) | ND(53) | ND(52) |
| 1,1,2-Trichloroethane | ug/Kg | ND(60) | ND(57) | ND(54) | ND(54) | ND(52) | ND(57) | ND(61) | ND(60) | ND(54) | ND(53) | ND(52) |
| 1,1-Dichloroethane | ug/Kg | ND(60) | ND(57) | ND(54) | ND(54) | ND(52) | ND(57) | ND(61) | ND(60) | ND(54) | ND(53) | ND(52) |
| 1,1-Dichloroethene | ug/Kg | – | – | – | – | – | – | – | – | – | – | – |
| 1,1-Dichloropropene | ug/Kg | ND(60) | ND(57) | ND(54) | ND(54) | ND(52) | ND(57) | ND(61) | ND(60) | ND(54) | ND(53) | ND(52) |
| 1,2,3-Trichlorobenzene | ug/Kg | – | – | – | – | – | – | – | – | – | – | – |
| 1,2,3-Trichloropropane | ug/Kg | ND(300) | ND(280) | ND(270) | ND(270) | ND(260) | ND(280) | ND(310) | ND(300) | ND(270) | ND(260) | ND(260) |
| 1,2,4-Trichlorobenzene | ug/Kg | ND(60) | ND(57) | ND(54) | ND(54) | ND(52) | ND(57) | ND(61) | ND(60) | ND(54) | ND(53) | ND(52) |
| 1,2,4-Trimethylbenzene | ug/Kg | ND(300) | ND(280) | ND(270) | ND(270) | ND(260) | ND(280) | ND(310) | ND(300) | ND(270) | ND(260) | ND(260) |
| 1,2-Dibromo-3-chloropropane (DBCP) | ug/Kg | ND(60) | ND(57) | ND(54) | ND(54) | ND(52) | ND(57) | ND(61) | ND(60) | ND(54) | ND(53) | ND(52) |
| 1,2-Dibromoethane (Ethylene Dibromide) | ug/Kg | ND(300) | ND(280) | ND(270) | ND(270) | ND(260) | ND(280) | ND(310) | ND(300) | ND(270) | ND(260) | ND(260) |
| 1,2-Dichlorobenzene | ug/Kg | ND(60) | ND(57) | ND(54) | ND(54) | ND(52) | ND(57) | ND(61) | ND(60) | ND(54) | ND(53) | ND(52) |
| 1,2-Dichloroethane | ug/Kg | ND(60) | ND(57) | ND(54) | ND(54) | ND(52) | ND(57) | ND(61) | ND(60) | ND(54) | ND(53) | ND(52) |
| 1,2-Dichloropropane | ug/Kg | ND(60) | ND(57) | ND(54) | ND(54) | ND(52) | ND(57) | ND(61) | ND(60) | ND(54) | ND(53) | ND(52) |
| 1,3,5-Trimethylbenzene | ug/Kg | ND(60) | ND(57) | ND(54) | ND(54) | ND(52) | ND(57) | ND(61) | ND(60) | ND(54) | ND(53) | ND(52) |
| 1,3-Dichlorobenzene | ug/Kg | ND(60) | ND(57) | ND(54) | ND(54) | ND(52) | ND(57) | ND(61) | ND(60) | ND(54) | ND(53) | ND(52) |
| 1,3-Dichloropropane | ug/Kg | ND(60) | ND(57) | ND(54) | ND(54) | ND(52) | ND(57) | ND(61) | ND(60) | ND(54) | ND(53) | ND(52) |
| 1,4-Dichlorobenzene | ug/kg | – | – | – | – | – | – | – | – | – | – | – |
| 2,2-Dichloropropane | ug/Kg | ND(60) | ND(57) | ND(54) | ND(54) | ND(52) | ND(57) | ND(61) | ND(60) | ND(54) | ND(53) | ND(52) |
| 2-Butanone (Methyl Ethyl Ketone) | ug/kg | – | – | – | – | – | – | – | – | – | – | – |
| 2-Chloroethyl vinyl ether | ug/Kg | ND(300) | ND(280) | ND(270) | ND(270) | ND(260) | ND(280) | ND(310) | ND(300) | ND(270) | ND(260) | ND(260) |
| 2-Chlorotoluene | ug/kg | – | – | – | – | – | – | – | – | – | – | – |
| 2-Hexanone | ug/kg | – | – | – | – | – | – | – | – | – | – | – |
| 2-Methylnaphthalene | ug/Kg | ND(300) | ND(280) | ND(270) | ND(270) | ND(260) | ND(280) | ND(310) | ND(300) | ND(270) | ND(260) | ND(260) |
| 2-Phenylbutane (sec-Butylbenzene) | ug/Kg | ND(300) | ND(280) | ND(270) | ND(270) | ND(260) | ND(280) | ND(310) | ND(300) | ND(270) | ND(260) | ND(260) |
| 4-Chlorotoluene | ug/Kg | ND(60) | ND(57) | ND(54) | ND(54) | ND(52) | ND(57) | ND(61) | ND(60) | ND(54) | ND(53) | ND(52) |
| 4-Methyl-2-Pentanone (Methyl Isobutyl Ketone) | ug/kg | – | – | – | – | – | – | – | – | – | – | – |
| Acetone | ug/Kg | ND(300) | ND(280) | ND(270) | ND(270) | ND(260) | ND(280) | ND(310) | ND(300) | ND(270) | ND(260) | ND(260) |
| Acrolein | ug/Kg | ND(1200) | ND(1100) | ND(1100) | ND(1100) | ND(1000) | ND(1100) | ND(1200) | ND(1200) | ND(1100) | ND(1100) | ND(1000) |
| Acrylonitrile | ug/kg | – | – | – | – | – | – | – | – | – | – | – |
| Benzene | ug/Kg | ND(300) | ND(280) | ND(270) | ND(270) | ND(260) | ND(280) | ND(310) | ND(300) | ND(270) | ND(260) | ND(260) |
| Bromobenzene | ug/Kg | ND(60) | ND(57) | ND(54) | ND(54) | ND(52) | ND(57) | ND(61) | ND(60) | ND(54) | ND(53) | ND(52) |
| Bromodichloromethane | ug/Kg | ND(60) | ND(57) | ND(54) | ND(54) | ND(52) | ND(57) | ND(61) | ND(60) | ND(54) | ND(53) | ND(52) |
| Bromoform | ug/Kg | ND(60) | ND(57) | ND(54) | ND(54) | ND(52) | ND(57) | ND(61) | ND(60) | ND(54) | ND(53) | ND(52) |
| Bromomethane (Methyl Bromide) | ug/Kg | ND(60) | ND(57) | ND(54) | ND(54) | ND(52) | ND(57) | ND(61) | ND(60) | ND(54) | ND(53) | ND(52) |
| Carbon disulfide | ug/Kg | ND(300) | ND(280) | ND(270) | ND(270) | ND(260) | ND(280) | ND(310) | ND(300) | ND(270) | ND(260) | ND(260) |
| Carbon tetrachloride | ug/Kg | ND(60) | ND(57) | ND(54) | ND(54) | ND(52) | ND(57) | ND(61) | ND(60) | ND(54) | ND(53) | ND(52) |
| Chlorobenzene | ug/Kg | ND(60) | ND(57) | ND(54) | ND(54) | ND(52) | ND(57) | ND(61) | ND(60) | ND(54) | ND(53) | ND(52) |
| Chlorobromomethane | ug/Kg | ND(60) | ND(57) | ND(54) | ND(54) | ND(52) | ND(57) | ND(61) | ND(60) | ND(54) | ND(53) | ND(52) |
| Chloroethane | ug/Kg | ND(60) | ND(57) | ND(54) | ND(54) | ND(52) | ND(57) | ND(61) | ND(60) | ND(54) | ND(53) | ND(52) |
| Chloroform (Trichloromethane) | ug/Kg | ND(300) | ND(280) | ND(270) | ND(270) | ND(260) | ND(280) | ND(310) | ND(300) | ND(270) | ND(260) | ND(260) |
| Chloromethane (Methyl Chloride) | ug/Kg | ND(60) | ND(57) | ND(54) | ND(54) | ND(52) | ND(57) | ND(61) | ND(60) | ND(54) | ND(53) | ND(52) |
| cis-1,2-Dichloroethene | ug/Kg | ND(300) | ND(280) | ND(270) | ND(270) | ND(260) | ND(280) | ND(310) | ND(300) | ND(270) | ND(260) | ND(260) |
| Cymene (p-Isopropyltoluene) | ug/Kg | ND(60) | ND(57) | ND(54) | ND(54) | ND(52) | ND(57) | ND(61) | ND(60) | ND(54) | ND(53) | ND(52) |
| Dibromochloromethane | ug/Kg | ND(60) | ND(57) | ND(54) | ND(54) | ND(52) | ND(57) | ND(61) | ND(60) | ND(54) | ND(53) | ND(52) |
| Dibromomethane | ug/Kg | ND(60) | ND(57) | ND(54) | ND(54) | ND(52) | ND(57) | ND(61) | ND(60) | ND(54) | ND(53) | ND(52) |
| Dichlorodifluoromethane (CFC-12) | ug/Kg | ND(60) | ND(57) | ND(54) | ND(54) | ND(52) | ND(57) | ND(61) | ND(60) | ND(54) | ND(53) | ND(52) |
| Ethyl Ether | ug/Kg | ND(300) | ND(280) | ND(270) | ND(270) | ND(260) | ND(280) | ND(310) | ND(300) | ND(270) | ND(260) | ND(260) |
| Ethylbenzene | ug/Kg | ND(300) | ND(280) | ND(270) | ND(270) | ND(260) | ND(280) | ND(310) | ND(300) | ND(270) | ND(260) | ND(260) |
| Hexachlorobutadiene | ug/Kg | ND(60) | ND(57) | ND(54) | ND(54) | ND(52) | ND(57) | ND(61) | ND(60) | ND(54) | ND(53) | ND(52) |
| Hexachloroethane | ug/kg | – | – | – | – | – | – | – | – | – | – | – |
| Iodomethane | ug/Kg | ND(60) | ND(57) | ND(54) | ND(54) | ND(52) | ND(57) | ND(61) | ND(60) | ND(54) | ND(53) | ND(52) |
| Isopropylbenzene | ug/Kg | ND(60) | ND(57) | ND(54) | ND(54) | ND(52) | ND(57) | ND(61) | ND(60) | ND(54) | ND(53) | ND(52) |
| Isopropyltoluene | ug/Kg | ND(300) | ND(280) | ND(270) | ND(270) | ND(260) | ND(280) | ND(310) | ND(300) | ND(270) | ND(260) | ND(260) |
| Methyl Tert Butyl Ether | ug/kg | – | – | – | – | – | – | – | – | – | – | – |
| Methylene chloride | ug/Kg | ND(60) | ND(57) | ND(54) | ND(54) | ND(52) | ND(57) | ND(61) | ND(60) | ND(54) | ND(53) | ND(52) |
| Naphthalene | ug/Kg | ND(300) | ND(280) | ND(270) | ND(270) | ND(260) | ND(280) | ND(310) | ND(300) | ND(270) | ND(260) | ND(260) |
| n-Butylbenzene | ug/Kg | ND(300) | ND(280) | ND(270) | ND(270) | ND(260) | ND(280) | ND(310) | ND(300) | ND(270) | ND(260) | ND(260) |
| n-Propylbenzene | ug/Kg | ND(60) | ND(57) | ND(54) | ND(54) | ND(52) | ND(57) | ND(61) | ND(60) | ND(54) | ND(53) | ND(52) |
| Styrene | ug/Kg | ND(60) | ND(57) | ND(54) | ND(54) | ND(52) | ND(57) | ND(61) | ND(60) | ND(54) | ND(53) | ND(52) |
| tert-Butylbenzene | ug/Kg | ND(60) | ND(57) | ND(54) | ND(54) | ND(52) | ND(57) | ND(61) | ND(60) | ND(54) | ND(53) | ND(52) |
| Tetrachloroethene | ug/Kg | ND(60) | ND(57) | ND(54) | ND(54) | ND(52) | ND(57) | ND(61) | ND(60) | ND(54) | ND(53) | ND(52) |
| Tetrahydrofuran | ug/Kg | 1400* | 3600* | 1000* | 2300* | 2000* | ND(57) | ND(61) | 1100* | 2600* | 2500* | 2600* |
| Toluene | ug/Kg | ND(300) | ND(280) | ND(270) | ND(270) | ND(260) | ND(280) | ND(310) | ND(300) | ND(270) | ND(260) | ND(260) |
| trans-1,2-Dichloroethene | ug/Kg | ND(60) | ND(57) | ND(54) | ND(54) | ND(52) | ND(57) | ND(61) | ND(60) | ND(54) | ND(53) | ND(52) |
| trans-1,4-Dichloro-2-butene | ug/Kg | ND(60) | ND(57) | ND(54) | ND(54) | ND(52) | ND(57) | ND(61) | ND(60) | ND(54) | ND(53) | ND(52) |
| Trichloroethene | ug/Kg | ND(60) | ND(57) | ND(54) | ND(54) | ND(52) | ND(57) | ND(61) | ND(60) | ND(54) | ND(53) | ND(52) |
| Trichlorofluoromethane (CFC-11) | ug/Kg | ND(60) | ND(57) | ND(54) | ND(54) | ND(52) | ND(57) | ND(61) | ND(60) | ND(54) | ND(53) | ND(52) |
| Vinyl acetate | ug/Kg | ND(60) | ND(57) | ND(54) | ND(54) | ND(52) | ND(57) | ND(61) | ND(60) | ND(54) | ND(53) | ND(52) |
| Vinyl chloride | ug/kg | – | – | – | – | – | – | – | – | – | – | – |
| Xylene (total) | ug/Kg | ND(60) | ND(57) | ND(54) | ND(54) | ND(52) | ND(57) | ND(61) | ND(60) | ND(54) | ND(53) | ND(52) |
| trans-1,3-Dichloropropene | ug/Kg | ND(120) | ND(110) | ND(110) | ND(110) | ND(100) | ND(110) | ND(120) | ND(120) | ND(110) | ND(110) | ND(100) |
| cis-1,2-Dichloropropene | ug/Kg | ND(60) | ND(57) | ND(54) | ND(54) | ND(52) | ND(57) | ND(61) | ND(60) | ND(54) | ND(53) | ND(52) |
| 1,3-Dichloropropene (total) | ug/Kg | ND(60) | ND(57) | ND(54) | ND(54) | ND(52) | ND(57) | ND(61) | ND(60) | ND(54) | ND(53) | ND(52) |
| | ug/Kg | ND(60) | ND(57) | ND(54) | ND(54) | ND(52) | ND(57) | ND(61) | ND(60) | ND(54) | ND(53) | ND(52) |

Notes: Boxed Value - Indicates exceedence of at least Part 201 criteria, referenced by column
Dashed Line - No applicable criteria or not analyzed
ID - Inadequate data to develop criteria

# TABLE 2
## GROUNDWATER ANALYTICAL SUMMARY, HISTORICAL VOC DATA
## 1120 BROADWAY VILLAGE AND ADJACENT PROPERTY
## ANN ARBOR, MICHIGAN

| Sample Location | Units | Michigan Act 451, Part 201 Groundwater: Residential & Commercial I Drinking Water | Residential & Commercial I Groundwater Volatilization to Indoor Air Inhalation | Groundwater Contact | AHI-SB-7 | AHI-SB-8 | AHI-SB-9 | AHI-SB-10 | GP-1 | GP-2 | GP-3 | GP-3 | GP-4 | GP-4 | GP-5 | GP-6 | GP-7 | GP-8 | GP-9 | GP-10 | GP-11 | GP-12 | GP-13 | GP-14 | GP-15 | GP-16 | GP-17 | GP-18 | GP-19 | GP-19 | GP-20 | GP-20 |
|---|---|---|---|---|---|---|---|---|---|---|---|---|---|---|---|---|---|---|---|---|---|---|---|---|---|---|---|---|---|---|---|---|
| Sample Identification | | | | | AHI-SB-7 | AHI-SB-8 | AHI-SB-9 | AHI-SB-10 | GP-1 | GP-2 | GP-3 | GP-3 | GP-4 | GP-4 | GP-5 | GP-6 | GP-7 | GP-8 | GP-9 | GP-10 | GP-11 | GP-12 | GP-13 | GP-14 | GP-15 | GP-16 | GP-17 | GP-18 | GP-19 | GP-19 | GP-20 | GP-20 |
| Sample Date | | | | | 11/20/2001 | 11/20/2001 | 11/20/2001 | 11/20/2001 | 7/11/2002 | 7/11/2002 | 7/12/2002 | 7/12/2002 | 7/15/2002 | 7/15/2002 | 7/16/2002 | 7/16/2002 | 7/17/2002 | 7/17/2002 | 7/18/2002 | 7/18/2002 | 7/18/2002 | 7/18/2002 | 7/19/2002 | 7/19/2002 | 7/19/2002 | 7/19/2002 | 7/19/2002 | 7/22/2002 | 7/23/2002 | 7/23/2002 | 7/23/2002 | 7/23/2002 |
| Sample depth | | | | | | | | | (28-32) | (28-32) | (20-24) | (30-34) | (20-24) | (30-32) | (28-32) | (13-17) | (29-33) | (18-22) | (28-31) | (28-31) | (19-23) | (16-20) | (16-20) | (32-35) | (18-22) | (22-25) | (18-22) | (26-30) | (18-22) | (23-27) | (15-19) | (25-27) |
| Sample duplicate | | | | | | | | | | | | | | | | | | | | | | | | | | | | (Original) | | | | |
| | Units | a | b | c | | | | | | | | | | | | | | | | | | | | | | | | | | | | |
| VOCs | | | | | | | | | | | | | | | | | | | | | | | | | | | | | | | | |
| 1,1,1,2-Tetrachloroethane | ug/L | 77 | 15000 | 30000 | ND(1.0) | ND(1.0) | ND(1.0) | ND(1.0) | ND(1.0) | ND(1.0) | ND(1.0) | ND(1.0) | ND(1.0) | ND(1.0) | ND(1.0) | 1.8 | ND(1.0) | ND(1.0) | ND(1.0) | ND(1.0) | ND(25) | ND(1.0) | ND(1000) | ND(1.0) | ND(10) | ND(200) | ND(200) | ND(1.0) | ND(50) | ND(1.0) | ND(50) | ND(50) |
| 1,1,1-Trichloroethane | ug/L | 200 | 660000 | 1300000 | ND(1.0) | 2.0 | ND(1.0) | ND(1.0) | ND(1.0) | ND(1.0) | ND(1.0) | ND(1.0) | ND(1.0) | ND(1.0) | ND(1.0) | 1.8 | ND(1.0) | ND(1.0) | ND(1.0) | ND(1.0) | ND(25) | ND(1.0) | ND(1000) | ND(1.0) | ND(10) | ND(200) | ND(200) | ND(1.0) | ND(50) | ND(1.0) | ND(50) | ND(50) |
| 1,1,2,2-Tetrachloroethane | ug/L | 8.5 | 12000 | 4700 | ND(1.0) | ND(1.0) | ND(1.0) | ND(1.0) | ND(1.0) | ND(1.0) | ND(1.0) | ND(1.0) | ND(1.0) | ND(1.0) | ND(1.0) | ND(1.0) | ND(1.0) | ND(1.0) | ND(1.0) | ND(1.0) | ND(25) | ND(1.0) | ND(1000) | ND(1.0) | ND(10) | ND(200) | ND(200) | ND(1.0) | ND(50) | ND(1.0) | ND(50) | ND(50) |
| 1,1,2-Trichloroethane | ug/L | 5 | 17000 | 21000 | ND(1.0) | ND(1.0) | ND(1.0) | ND(1.0) | ND(1.0) | ND(1.0) | ND(1.0) | ND(1.0) | ND(1.0) | ND(1.0) | ND(1.0) | ND(1.0) | ND(1.0) | ND(1.0) | ND(1.0) | ND(1.0) | ND(25) | ND(1.0) | ND(1000) | ND(1.0) | ND(10) | ND(200) | ND(200) | ND(1.0) | ND(50) | ND(1.0) | ND(50) | ND(50) |
| 1,1-Dichloroethane | ug/L | 880 | 1000000 | 2400000 | ND(1.0) | ND(1.0) | ND(1.0) | ND(1.0) | -- | -- | -- | -- | -- | -- | -- | -- | -- | -- | -- | -- | -- | -- | -- | -- | -- | -- | -- | -- | -- | -- | -- | -- |
| 1,1-Dichloroethene | ug/L | 7 | 200 | 11000 | **16.0[a]** | ND(1.0) | ND(1.0) | ND(1.0) | ND(1.0) | ND(1.0) | ND(1.0) | ND(1.0) | ND(1.0) | ND(1.0) | ND(1.0) | ND(1.0) | ND(1.0) | ND(1.0) | ND(1.0) | ND(1.0) | ND(25) | ND(1.0) | ND(1000) | ND(1.0) | ND(10) | ND(200) | ND(200) | ND(1.0) | ND(50) | ND(1.0) | ND(50) | ND(50) |
| 1,1-Dichloropropene | ug/L | | | | ND(1.0) | ND(1.0) | ND(1.0) | ND(1.0) | -- | -- | -- | -- | -- | -- | -- | -- | -- | -- | -- | -- | -- | -- | -- | -- | -- | -- | -- | -- | -- | -- | -- | -- |
| 1,2,3-Trichlorobenzene | ug/L | | | | ND(5.0) | ND(5.0) | ND(5.0) | ND(5.0) | ND(5.0) | ND(5.0) | ND(5.0) | ND(5.0) | ND(5.0) | ND(5.0) | ND(5.0) | ND(5.0) | ND(5.0) | ND(5.0) | ND(5.0) | ND(5.0) | ND(120) | ND(5.0) | ND(5000) | ND(5.0) | ND(50) | ND(1000) | ND(1000) | ND(5.0) | ND(250) | ND(5.0) | ND(250) | ND(250) |
| 1,2,3-Trichloropropane | ug/L | 42 | ID | 84000 | ND(1.0) | ND(1.0) | ND(1.0) | ND(1.0) | ND(1.0) | ND(1.0) | ND(1.0) | ND(1.0) | ND(1.0) | ND(1.0) | ND(1.0) | ND(1.0) | ND(1.0) | ND(1.0) | ND(1.0) | ND(1.0) | ND(25) | ND(1.0) | ND(1000) | ND(1.0) | ND(10) | ND(200) | ND(200) | ND(1.0) | ND(50) | ND(1.0) | ND(50) | ND(50) |
| 1,2,4-Trichlorobenzene | ug/L | 70 | 300000 | 19000 | ND(5.0) | ND(5.0) | ND(5.0) | ND(5.0) | ND(5.0) | ND(5.0) | ND(5.0) | ND(5.0) | ND(5.0) | ND(5.0) | ND(5.0) | ND(5.0) | ND(5.0) | ND(5.0) | ND(5.0) | ND(5.0) | ND(120) | ND(5.0) | ND(5000) | ND(5.0) | ND(50) | ND(1000) | ND(1000) | ND(5.0) | ND(250) | ND(5.0) | ND(250) | ND(250) |
| 1,2,4-Trimethylbenzene | ug/L | 63 | 56000 | 56000 | ND(1.0) | ND(1.0) | ND(1.0) | ND(1.0) | ND(1.0) | ND(1.0) | ND(1.0) | ND(1.0) | ND(1.0) | ND(1.0) | ND(1.0) | ND(1.0) | ND(1.0) | ND(1.0) | ND(1.0) | ND(1.0) | ND(25) | ND(1.0) | ND(1000) | ND(1.0) | ND(10) | ND(200) | ND(200) | ND(1.0) | ND(50) | ND(1.0) | ND(50) | ND(50) |
| 1,2-Dibromo-3-chloropropane (DBCP) | ug/L | 0.2 | 1200 | 390 | ND(1.0) | ND(1.0) | ND(1.0) | ND(1.0) | ND(5.0) | ND(5.0) | ND(5.0) | ND(5.0) | ND(5.0) | ND(5.0) | ND(5.0) | ND(5.0) | ND(5.0) | ND(5.0) | ND(5.0) | ND(5.0) | ND(120) | ND(5.0) | ND(5000) | ND(5.0) | ND(50) | ND(1000) | ND(1000) | ND(5.0) | ND(250) | ND(5.0) | ND(250) | ND(250) |
| 1,2-Dibromoethane (Ethylene Dibromide) | ug/L | 1 | 2400 | 25 | ND(1.0) | ND(1.0) | ND(1.0) | ND(1.0) | ND(1.0) | ND(1.0) | ND(1.0) | ND(1.0) | ND(1.0) | ND(1.0) | ND(1.0) | ND(1.0) | ND(1.0) | ND(1.0) | ND(1.0) | ND(1.0) | ND(25) | ND(1.0) | ND(1000) | ND(1.0) | ND(10) | ND(200) | ND(200) | ND(1.0) | ND(50) | ND(1.0) | ND(50) | ND(50) |
| 1,2-Dichlorobenzene | ug/L | 600 | 160000 | 160000 | ND(1.0) | ND(1.0) | ND(1.0) | ND(1.0) | ND(1.0) | ND(1.0) | ND(1.0) | ND(1.0) | ND(1.0) | ND(1.0) | ND(1.0) | ND(1.0) | ND(1.0) | ND(1.0) | ND(1.0) | ND(1.0) | ND(25) | ND(1.0) | ND(1000) | ND(1.0) | ND(10) | ND(200) | ND(200) | ND(1.0) | ND(50) | ND(1.0) | ND(50) | ND(50) |
| 1,2-Dichloroethane | ug/L | 5 | 9600 | 19000 | ND(1.0) | ND(1.0) | ND(1.0) | ND(1.0) | ND(1.0) | ND(1.0) | ND(1.0) | ND(1.0) | ND(1.0) | ND(1.0) | ND(1.0) | ND(1.0) | ND(1.0) | ND(1.0) | ND(1.0) | ND(1.0) | ND(25) | ND(1.0) | ND(1000) | ND(1.0) | ND(10) | ND(200) | ND(200) | ND(1.0) | ND(50) | ND(1.0) | ND(50) | ND(50) |
| 1,2-Dichloropropane | ug/L | 5 | 16000 | 16000 | ND(1.0) | ND(1.0) | ND(1.0) | ND(1.0) | ND(1.0) | ND(1.0) | ND(1.0) | ND(1.0) | ND(1.0) | ND(1.0) | ND(1.0) | ND(1.0) | ND(1.0) | ND(1.0) | ND(1.0) | ND(1.0) | ND(25) | ND(1.0) | ND(1000) | ND(1.0) | ND(10) | ND(200) | ND(200) | ND(1.0) | ND(50) | ND(1.0) | ND(50) | ND(50) |
| 1,3,5-Trimethylbenzene | ug/L | 72 | 61000 | 61000 | ND(1.0) | ND(1.0) | ND(1.0) | ND(1.0) | ND(1.0) | ND(1.0) | ND(1.0) | ND(1.0) | ND(1.0) | ND(1.0) | ND(1.0) | ND(1.0) | ND(1.0) | ND(1.0) | ND(1.0) | ND(1.0) | ND(25) | ND(1.0) | ND(1000) | ND(1.0) | ND(10) | ND(200) | ND(200) | ND(1.0) | ND(50) | ND(1.0) | ND(50) | ND(50) |
| 1,3-Dichlorobenzene | ug/L | 6.6 | ID | 2000 | ND(1.0) | ND(1.0) | ND(1.0) | ND(1.0) | ND(1.0) | ND(1.0) | ND(1.0) | ND(1.0) | ND(1.0) | ND(1.0) | ND(1.0) | ND(1.0) | ND(1.0) | ND(1.0) | ND(1.0) | ND(1.0) | ND(25) | ND(1.0) | ND(1000) | ND(1.0) | ND(10) | ND(200) | ND(200) | ND(1.0) | ND(50) | ND(1.0) | ND(50) | ND(50) |
| 1,3-Dichloropropane | ug/L | | | | ND(1.0) | ND(1.0) | ND(1.0) | ND(1.0) | -- | -- | -- | -- | -- | -- | -- | -- | -- | -- | -- | -- | -- | -- | -- | -- | -- | -- | -- | -- | -- | -- | -- | -- |
| 1,4-Dichlorobenzene | ug/L | 75 | 16000 | 6400 | ND(1.0) | ND(1.0) | ND(1.0) | ND(1.0) | ND(1.0) | ND(1.0) | ND(1.0) | ND(1.0) | ND(1.0) | ND(1.0) | ND(1.0) | ND(1.0) | ND(1.0) | ND(1.0) | ND(1.0) | ND(1.0) | ND(25) | ND(1.0) | ND(1000) | ND(1.0) | ND(10) | ND(200) | ND(200) | ND(1.0) | ND(50) | ND(1.0) | ND(50) | ND(50) |
| 2,2-Dichloropropane | ug/L | | | | ND(1.0) | ND(1.0) | ND(1.0) | ND(1.0) | -- | -- | -- | -- | -- | -- | -- | -- | -- | -- | -- | -- | -- | -- | -- | -- | -- | -- | -- | -- | -- | -- | -- | -- |
| 2-Butanone (Methyl Ethyl Ketone) | ug/L | 13000 | 240000000 | 240000000 | -- | -- | -- | -- | ND(5.0) | ND(5.0) | ND(5.0) | ND(5.0) | ND(5.0) | ND(5.0) | ND(5.0) | ND(5.0) | ND(5.0) | ND(5.0) | ND(5.0) | ND(5.0) | ND(120) | ND(5.0) | ND(5000) | ND(5.0) | ND(50) | ND(1000) | ND(1000) | ND(5.0) | ND(250) | ND(5.0) | ND(250) | ND(250) |
| 2-Chloroethyl vinyl ether | ug/L | ID | ID | ID | -- | -- | -- | -- | -- | -- | -- | -- | -- | -- | -- | -- | -- | -- | -- | -- | -- | -- | -- | -- | -- | -- | -- | -- | -- | -- | -- | -- |
| 2-Chlorotoluene | ug/L | 150 | 220000 | 44000 | ND(1.0) | ND(1.0) | ND(1.0) | ND(1.0) | -- | -- | -- | -- | -- | -- | -- | -- | -- | -- | -- | -- | -- | -- | -- | -- | -- | -- | -- | -- | -- | -- | -- | -- |
| 2-Hexanone | ug/L | 1000 | 4200000 | 5200000 | -- | -- | -- | -- | ND(5.0) | ND(5.0) | ND(5.0) | ND(5.0) | ND(5.0) | ND(5.0) | ND(5.0) | ND(5.0) | ND(5.0) | ND(5.0) | ND(5.0) | ND(5.0) | ND(120) | ND(5.0) | ND(5000) | ND(5.0) | ND(50) | ND(1000) | ND(1000) | ND(5.0) | ND(250) | ND(5.0) | ND(250) | ND(250) |
| 2-Methylnaphthalene | ug/L | 260 | ID | 25000 | ND(5.0) | ND(5.0) | ND(5.0) | ND(5.0) | ND(5.0) | ND(5.0) | ND(5.0) | ND(5.0) | ND(5.0) | ND(5.0) | ND(5.0) | ND(5.0) | ND(5.0) | ND(5.0) | ND(5.0) | ND(5.0) | ND(120) | ND(5.0) | ND(5000) | ND(5.0) | ND(50) | ND(1000) | ND(1000) | ND(5.0) | ND(250) | ND(5.0) | ND(250) | ND(250) |
| 2-Phenylbutane (sec-Butylbenzene) | ug/L | 80 | ID | 4400 | ND(1.0) | ND(1.0) | ND(1.0) | ND(1.0) | ND(1.0) | ND(1.0) | ND(1.0) | ND(1.0) | ND(1.0) | ND(1.0) | ND(1.0) | ND(1.0) | ND(1.0) | ND(1.0) | ND(1.0) | ND(1.0) | ND(25) | ND(1.0) | ND(1000) | ND(1.0) | ND(10) | ND(200) | ND(200) | ND(1.0) | ND(50) | ND(1.0) | ND(50) | ND(50) |
| 4-Chlorotoluene | ug/L | | | | ND(1.0) | ND(1.0) | ND(1.0) | ND(1.0) | -- | -- | -- | -- | -- | -- | -- | -- | -- | -- | -- | -- | -- | -- | -- | -- | -- | -- | -- | -- | -- | -- | -- | -- |
| 4-Methyl-2-Pentanone (Methyl Isobutyl Ketone) | ug/L | 1800 | 20000000 | 13000000 | -- | -- | -- | -- | ND(5.0) | ND(5.0) | ND(5.0) | ND(5.0) | ND(5.0) | ND(5.0) | ND(5.0) | ND(5.0) | ND(5.0) | ND(5.0) | ND(5.0) | ND(5.0) | ND(120) | ND(5.0) | ND(5000) | ND(5.0) | ND(50) | ND(1000) | ND(1000) | ND(5.0) | ND(250) | ND(5.0) | ND(250) | ND(250) |
| Acetone | ug/L | 730 | 1000000000 | 31000000 | -- | -- | -- | -- | ND(20) | ND(20) | ND(20) | ND(20) | ND(20) | ND(20) | ND(20) | ND(20) | ND(20) | ND(20) | ND(20) | ND(20) | ND(500) | ND(20) | ND(20000) | ND(20) | ND(200) | ND(4000) | ND(4000) | ND(20) | ND(1000) | ND(20) | ND(1000) | ND(1000) |
| Acrolein | ug/L | 120 | 2100 | 3400000 | -- | -- | -- | -- | -- | -- | -- | -- | -- | -- | -- | -- | -- | -- | -- | -- | -- | -- | -- | -- | -- | -- | -- | -- | -- | -- | -- | -- |
| Acrylonitrile | ug/L | 2.6 | 34000 | 14000 | -- | -- | -- | -- | ND(5.0) | ND(5.0) | ND(5.0) | ND(5.0) | ND(5.0) | ND(5.0) | ND(5.0) | ND(5.0) | ND(5.0) | ND(5.0) | ND(5.0) | ND(5.0) | ND(120) | ND(5.0) | ND(5000) | ND(5.0) | ND(50) | ND(1000) | ND(1000) | ND(5.0) | ND(250) | ND(5.0) | ND(250) | ND(250) |
| Benzene | ug/L | 5 | 5600 | 11000 | ND(1.0) | ND(1.0) | ND(1.0) | ND(1.0) | ND(1.0) | ND(1.0) | ND(1.0) | ND(1.0) | ND(1.0) | ND(1.0) | ND(1.0) | ND(1.0) | ND(1.0) | ND(1.0) | ND(1.0) | ND(1.0) | ND(25) | ND(1.0) | ND(1000) | ND(1.0) | ND(10) | ND(200) | ND(200) | ND(1.0) | ND(50) | ND(1.0) | ND(50) | ND(50) |
| Bromobenzene | ug/L | 18 | 180000 | 12000 | ND(1.0) | ND(1.0) | ND(1.0) | ND(1.0) | ND(1.0) | ND(1.0) | ND(1.0) | ND(1.0) | ND(1.0) | ND(1.0) | ND(1.0) | ND(1.0) | ND(1.0) | ND(1.0) | ND(1.0) | ND(1.0) | ND(25) | ND(1.0) | ND(1000) | ND(1.0) | ND(10) | ND(200) | ND(200) | ND(1.0) | ND(50) | ND(1.0) | ND(50) | ND(50) |
| Bromodichloromethane | ug/L | 100 | 4800 | 14000 | ND(1.0) | ND(1.0) | ND(1.0) | ND(1.0) | ND(1.0) | ND(1.0) | ND(1.0) | ND(1.0) | ND(1.0) | ND(1.0) | ND(1.0) | ND(1.0) | ND(1.0) | ND(1.0) | ND(1.0) | ND(1.0) | ND(25) | ND(1.0) | ND(1000) | ND(1.0) | ND(10) | ND(200) | ND(200) | ND(1.0) | ND(50) | ND(1.0) | ND(50) | ND(50) |
| Bromoform | ug/L | 100 | 470000 | 140000 | ND(1.0) | ND(1.0) | ND(1.0) | ND(1.0) | ND(1.0) | ND(1.0) | ND(1.0) | ND(1.0) | ND(1.0) | ND(1.0) | ND(1.0) | ND(1.0) | ND(1.0) | ND(1.0) | ND(1.0) | ND(1.0) | ND(25) | ND(1.0) | ND(1000) | ND(1.0) | ND(10) | ND(200) | ND(200) | ND(1.0) | ND(50) | ND(1.0) | ND(50) | ND(50) |
| Bromomethane (Methyl Bromide) | ug/L | 10 | 4000 | 70000 | ND(1.0) | ND(1.0) | ND(1.0) | ND(1.0) | ND(5.0) | ND(5.0) | ND(5.0) | ND(5.0) | ND(5.0) | ND(5.0) | ND(5.0) | ND(5.0) | ND(5.0) | ND(5.0) | ND(5.0) | ND(5.0) | ND(120) | ND(5.0) | ND(5000) | ND(5.0) | ND(50) | ND(1000) | ND(1000) | ND(5.0) | ND(250) | ND(5.0) | ND(250) | ND(250) |
| Carbon disulfide | ug/L | 800 | 250000 | 1200000 | -- | -- | -- | -- | ND(1.0) | ND(1.0) | ND(1.0) | ND(1.0) | ND(1.0) | ND(1.0) | ND(1.0) | ND(1.0) | ND(1.0) | ND(1.0) | ND(1.0) | ND(1.0) | ND(25) | ND(1.0) | ND(1000) | ND(1.0) | ND(10) | ND(200) | ND(200) | ND(1.0) | ND(50) | ND(1.0) | ND(50) | ND(50) |
| Carbon tetrachloride | ug/L | 5 | 370 | 4600 | ND(1.0) | ND(1.0) | ND(1.0) | ND(1.0) | ND(1.0) | ND(1.0) | ND(1.0) | ND(1.0) | ND(1.0) | ND(1.0) | ND(1.0) | ND(1.0) | ND(1.0) | ND(1.0) | ND(1.0) | ND(1.0) | ND(25) | ND(1.0) | ND(1000) | ND(1.0) | ND(10) | ND(200) | ND(200) | ND(1.0) | ND(50) | ND(1.0) | ND(50) | ND(50) |
| Chlorobenzene | ug/L | 100 | 210000 | 86000 | ND(1.0) | ND(1.0) | ND(1.0) | ND(1.0) | ND(1.0) | ND(1.0) | ND(1.0) | ND(1.0) | ND(1.0) | ND(1.0) | ND(1.0) | ND(1.0) | ND(1.0) | ND(1.0) | ND(1.0) | ND(1.0) | ND(25) | ND(1.0) | ND(1000) | ND(1.0) | ND(10) | ND(200) | ND(200) | ND(1.0) | ND(50) | ND(1.0) | ND(50) | ND(50) |
| Chlorobromomethane | ug/L | | | | ND(1.0) | ND(1.0) | ND(1.0) | ND(1.0) | ND(1.0) | ND(1.0) | ND(1.0) | ND(1.0) | ND(1.0) | ND(1.0) | ND(1.0) | ND(1.0) | ND(1.0) | ND(1.0) | ND(1.0) | ND(1.0) | ND(25) | ND(1.0) | ND(1000) | ND(1.0) | ND(10) | ND(200) | ND(200) | ND(1.0) | ND(50) | ND(1.0) | ND(50) | ND(50) |
| Chloroethane | ug/L | 430 | 5700000 | 440000 | ND(1.0) | ND(1.0) | ND(1.0) | ND(1.0) | ND(5.0) | ND(5.0) | ND(5.0) | ND(5.0) | ND(5.0) | ND(5.0) | ND(5.0) | ND(5.0) | ND(5.0) | ND(5.0) | ND(5.0) | ND(5.0) | ND(120) | ND(5.0) | ND(5000) | ND(5.0) | ND(50) | ND(1000) | ND(1000) | ND(5.0) | ND(250) | ND(5.0) | ND(250) | ND(250) |
| Chloroform (Trichloromethane) | ug/L | 100 | 28000 | 150000 | ND(1.0) | ND(1.0) | ND(1.0) | ND(1.0) | ND(1.0) | ND(1.0) | ND(1.0) | ND(1.0) | ND(1.0) | ND(1.0) | ND(1.0) | ND(1.0) | ND(1.0) | ND(1.0) | ND(1.0) | ND(1.0) | ND(25) | ND(1.0) | ND(1000) | ND(1.0) | ND(10) | ND(200) | ND(200) | ND(1.0) | ND(50) | ND(1.0) | ND(50) | ND(50) |
| Chloromethane (Methyl Chloride) | ug/L | 260 | 8600 | 490000 | ND(1.0) | ND(1.0) | ND(1.0) | ND(1.0) | ND(5.0) | ND(5.0) | ND(5.0) | ND(5.0) | ND(5.0) | ND(5.0) | ND(5.0) | ND(5.0) | ND(5.0) | ND(5.0) | ND(5.0) | ND(5.0) | ND(120) | ND(5.0) | ND(5000) | ND(5.0) | ND(50) | ND(1000) | ND(1000) | ND(5.0) | ND(250) | ND(5.0) | ND(250) | ND(250) |
| cis-1,2-Dichloroethene | ug/L | 70 | 93000 | 200000 | ND(1.0) | 47.0 | 7.0 | ND(1.0) | ND(1.0) | ND(1.0) | 16 | ND(1.0) | 6.9 | 17 | 7.1 | 26 | 2.5 | 11 | ND(1.0) | 2.9 | ND(25) | 27 | ND(1000) | ND(1.0) | ND(10) | ND(200) | ND(200) | 29 | ND(50) | ND(1.0) | ND(50) | ND(50) |
| Cymene (p-Isopropyltoluene) | ug/L | | | | -- | -- | -- | -- | ND(1.0) | ND(1.0) | ND(1.0) | ND(1.0) | ND(1.0) | ND(1.0) | ND(1.0) | ND(1.0) | ND(1.0) | ND(1.0) | ND(1.0) | ND(1.0) | ND(25) | ND(1.0) | ND(1000) | ND(1.0) | ND(10) | ND(200) | ND(200) | ND(1.0) | ND(50) | ND(1.0) | ND(50) | ND(50) |
| Dibromochloromethane | ug/L | 100 | 14000 | 18000 | ND(1.0) | ND(1.0) | ND(1.0) | ND(1.0) | ND(1.0) | ND(1.0) | ND(1.0) | ND(1.0) | ND(1.0) | ND(1.0) | ND(1.0) | ND(1.0) | ND(1.0) | ND(1.0) | ND(1.0) | ND(1.0) | ND(25) | ND(1.0) | ND(1000) | ND(1.0) | ND(10) | ND(200) | ND(200) | ND(1.0) | ND(50) | ND(1.0) | ND(50) | ND(50) |
| Dibromomethane | ug/L | 80 | ID | 530000 | ND(5.0) | ND(5.0) | ND(5.0) | ND(5.0) | ND(1.0) | ND(1.0) | ND(1.0) | ND(1.0) | ND(1.0) | ND(1.0) | ND(1.0) | ND(1.0) | ND(1.0) | ND(1.0) | ND(1.0) | ND(1.0) | ND(25) | ND(1.0) | ND(1000) | ND(1.0) | ND(10) | ND(200) | ND(200) | ND(1.0) | ND(50) | ND(1.0) | ND(50) | ND(50) |
| Dichlorodifluoromethane (CFC-12) | ug/L | 1700 | 220000 | 300000 | ND(1.0) | ND(1.0) | ND(1.0) | ND(1.0) | ND(5.0) | ND(5.0) | ND(5.0) | ND(5.0) | ND(5.0) | ND(5.0) | ND(5.0) | ND(5.0) | ND(5.0) | ND(5.0) | ND(5.0) | ND(5.0) | ND(120) | ND(5.0) | ND(5000) | ND(5.0) | ND(50) | ND(5.0) | ND(1000) | ND(5.0) | ND(250) | ND(5.0) | ND(250) | ND(250) |
| Ethyl Ether | ug/L | 10 | 61000000 | 35000000 | -- | -- | -- | -- | ND(5.0) | ND(5.0) | ND(5.0) | ND(5.0) | ND(5.0) | ND(5.0) | ND(5.0) | ND(5.0) | ND(5.0) | ND(5.0) | ND(5.0) | ND(5.0) | ND(120) | ND(5.0) | ND(5000) | ND(5.0) | ND(50) | ND(1000) | ND(1000) | ND(5.0) | ND(250) | ND(5.0) | ND(250) | ND(250) |
| Ethylbenzene | ug/L | 74 | 110000 | 170000 | ND(1.0) | ND(1.0) | ND(1.0) | ND(1.0) | ND(1.0) | ND(1.0) | ND(1.0) | ND(1.0) | ND(1.0) | ND(1.0) | ND(1.0) | ND(1.0) | ND(1.0) | ND(1.0) | ND(1.0) | ND(1.0) | ND(25) | ND(1.0) | ND(1000) | ND(1.0) | ND(10) | ND(200) | ND(200) | 1.7 | ND(50) | ND(1.0) | ND(50) | ND(50) |
| Hexachlorobutadiene | ug/L | 15 | 1600 | 400 | ND(1.0) | ND(1.0) | ND(1.0) | ND(1.0) | -- | -- | -- | -- | -- | -- | -- | -- | -- | -- | -- | -- | -- | -- | -- | -- | -- | -- | -- | -- | -- | -- | -- | -- |
| Hexachloroethane | ug/L | 7.3 | 27000 | 1900 | -- | -- | -- | -- | ND(5.0) | ND(5.0) | ND(5.0) | ND(5.0) | ND(5.0) | ND(5.0) | ND(5.0) | ND(5.0) | ND(5.0) | ND(5.0) | ND(5.0) | ND(5.0) | ND(120) | ND(5.0) | ND(5000) | ND(5.0) | ND(50) | ND(1000) | ND(1000) | ND(5.0) | ND(250) | ND(5.0) | ND(250) | ND(250) |
| Iodomethane | ug/L | | | | -- | -- | -- | -- | ND(1.0) | ND(1.0) | ND(1.0) | ND(1.0) | ND(1.0) | ND(1.0) | ND(1.0) | ND(1.0) | ND(1.0) | ND(1.0) | ND(1.0) | ND(1.0) | ND(25) | ND(1.0) | ND(1000) | ND(1.0) | ND(10) | ND(200) | ND(200) | ND(1.0) | ND(50) | ND(1.0) | ND(50) | ND(50) |
| Isopropylbenzene | ug/L | 800 | 56000 | 56000 | ND(5.0) | ND(5.0) | ND(5.0) | ND(5.0) | ND(1.0) | ND(1.0) | ND(1.0) | ND(1.0) | ND(1.0) | ND(1.0) | ND(1.0) | ND(1.0) | ND(1.0) | ND(1.0) | ND(1.0) | ND(1.0) | ND(25) | ND(1.0) | ND(1000) | ND(1.0) | ND(10) | ND(200) | ND(200) | ND(1.0) | ND(50) | ND(1.0) | ND(50) | ND(50) |
| Isopropyltoluene | ug/L | | | | ND(1.0) | ND(1.0) | ND(1.0) | ND(1.0) | -- | -- | -- | -- | -- | -- | -- | -- | -- | -- | -- | -- | -- | -- | -- | -- | -- | -- | -- | -- | -- | -- | -- | -- |
| Methyl Tert Butyl Ether | ug/L | 40 | 47000000 | 610000 | -- | -- | -- | -- | ND(1.0) | ND(1.0) | 9.2 | ND(1.0) | 9.8 | 8.7 | 9.0 | ND(1.0) | 18 | ND(1.0) | 4.8 | 1.1 | ND(25) | ND(1.0) | ND(1000) | 1.6 | ND(10) | ND(200) | ND(200) | 11 | ND(50) | 35 | ND(50) | ND(50) |
| Methylene chloride | ug/L | 5 | 220000 | 220000 | ND(5.0) | ND(5.0) | ND(5.0) | ND(5.0) | ND(5.0) | ND(5.0) | ND(5.0) | ND(5.0) | ND(5.0) | ND(5.0) | ND(5.0) | ND(5.0) | ND(5.0) | ND(5.0) | ND(5.0) | ND(5.0) | ND(120) | ND(5.0) | ND(5000) | ND(5.0) | ND(50) | ND(1000) | ND(1000) | ND(5.0) | ND(250) | ND(5.0) | ND(250) | ND(250) |
| Naphthalene | ug/L | 520 | 31000 | 31000 | ND(5.0) | ND(5.0) | ND(5.0) | ND(5.0) | ND(5.0) | ND(5.0) | ND(5.0) | ND(5.0) | ND(5.0) | ND(5.0) | ND(5.0) | ND(5.0) | ND(5.0) | ND(5.0) | ND(5.0) | ND(5.0) | ND(120) | ND(5.0) | ND(5000) | ND(5.0) | ND(50) | ND(1000) | ND(1000) | ND(5.0) | ND(250) | ND(5.0) | ND(250) | ND(250) |
| n-Butylbenzene | ug/L | 80 | ID | 5900 | ND(1.0) | ND(1.0) | ND(1.0) | ND(1.0) | ND(1.0) | ND(1.0) | ND(1.0) | ND(1.0) | ND(1.0) | ND(1.0) | ND(1.0) | ND(1.0) | ND(1.0) | ND(1.0) | ND(1.0) | ND(1.0) | ND(25) | ND(1.0) | ND(1000) | ND(1.0) | ND(10) | ND(200) | ND(200) | ND(1.0) | ND(50) | ND(1.0) | ND(50) | ND(50) |
| n-Propylbenzene | ug/L | 80 | ID | 15000 | ND(1.0) | ND(1.0) | ND(1.0) | ND(1.0) | ND(1.0) | ND(1.0) | ND(1.0) | ND(1.0) | ND(1.0) | ND(1.0) | ND(1.0) | ND(1.0) | ND(1.0) | ND(1.0) | ND(1.0) | ND(1.0) | ND(25) | ND(1.0) | ND(1000) | ND(1.0) | ND(10) | ND(200) | ND(200) | ND(1.0) | ND(50) | ND(1.0) | ND(50) | ND(50) |
| Styrene | ug/L | 100 | 170000 | 9700 | ND(1.0) | ND(1.0) | ND(1.0) | ND(1.0) | ND(1.0) | ND(1.0) | ND(1.0) | ND(1.0) | ND(1.0) | ND(1.0) | ND(1.0) | ND(1.0) | ND(1.0) | ND(1.0) | ND(1.0) | ND(1.0) | ND(25) | ND(1.0) | ND(1000) | ND(1.0) | ND(10) | ND(200) | ND(200) | ND(1.0) | ND(50) | ND(1.0) | ND(50) | ND(50) |
| tert-Butylbenzene | ug/L | 80 | ID | 8900 | ND(1.0) | ND(1.0) | ND(1.0) | ND(1.0) | ND(1.0) | ND(1.0) | ND(1.0) | ND(1.0) | ND(1.0) | ND(1.0) | ND(1.0) | ND(1.0) | ND(1.0) | ND(1.0) | ND(1.0) | ND(1.0) | ND(25) | ND(1.0) | ND(1000) | ND(1.0) | ND(10) | ND(200) | ND(200) | ND(1.0) | ND(50) | ND(1.0) | ND(50) | ND(50) |
| Tetrachloroethene | ug/L | 5 | 25000 | 12000 | **818[a]** | **10400[a]** | **463[a]** | **400[a]** | 3.7 | **45[a]** | **26000[abc]** | **8500[a]** | **17000[ac]** | **380[a]** | **14[a]** | **3500[a]** | 3.5 | ND(1.0) | 2.7 | **95[a]** | **410[a]** | 1.7 | **74000[abc]** | 1.2 | **590[a]** | **3000[a]** | **7900[a]** | 2.4 | **1900[a]** | **30[a]** | **2500[a]** | **310[a]** |
| Tetrahydrofuran | ug/L | 95 | 6900000 | 1600000 | -- | -- | -- | -- | ND(5.0) | ND(5.0) | ND(5.0) | ND(5.0) | ND(5.0) | ND(5.0) | ND(5.0) | ND(5.0) | ND(5.0) | ND(5.0) | ND(5.0) | ND(5.0) | ND(120) | ND(5.0) | ND(5000) | ND(5.0) | ND(50) | ND(1000) | ND(1000) | ND(5.0) | ND(250) | ND(5.0) | ND(250) | ND(250) |
| Toluene | ug/L | 790 | 530000 | 530000 | ND(1.0) | ND(1.0) | ND(1.0) | ND(1.0) | ND(1.0) | 1.4 | 1.4 | ND(1.0) | ND(1.0) | ND(1.0) | ND(1.0) | ND(1.0) | ND(1.0) | ND(1.0) | ND(1.0) | 1.7 | ND(25) | ND(1.0) | ND(1000) | ND(1.0) | ND(10) | ND(200) | ND(200) | ND(1.0) | ND(50) | 1.0 | ND(50) | ND(50) |
| trans-1,2-Dichloroethene | ug/L | 100 | 85000 | 220000 | ND(1.0) | ND(1.0) | ND(1.0) | ND(1.0) | ND(1.0) | ND(1.0) | 1.8 | ND(1.0) | ND(1.0) | 2.0 | ND(1.0) | 1.1 | ND(1.0) | ND(1.0) | ND(1.0) | ND(1.0) | ND(25) | 1.4 | ND(1000) | ND(1.0) | ND(10) | ND(200) | ND(200) | 2.8 | ND(50) | ND(1.0) | ND(50) | ND(50) |
| trans-1,4-Dichloro-2-butene | ug/L | | | | -- | -- | -- | -- | ND(5.0) | ND(5.0) | ND(5.0) | ND(5.0) | ND(5.0) | ND(5.0) | ND(5.0) | ND(5.0) | ND(5.0) | ND(5.0) | ND(5.0) | ND(5.0) | ND(120) | ND(5.0) | ND(5000) | ND(5.0) | ND(50) | ND(1000) | ND(1000) | ND(5.0) | ND(250) | ND(5.0) | ND(250) | ND(250) |
| Trichloroethene | ug/L | 5 | 15000 | 22000 | **109[a]** | **18.0[a]** | **192[a]** | **7.0[a]** | ND(1.0) | ND(1.0) | 2.1 | ND(1.0) | 2.0 | ND(1.0) | 3.1 | **25[a]** | ND(1.0) | ND(1.0) | ND(1.0) | **24[a]** | ND(25) | ND(1.0) | ND(1000) | ND(1.0) | ND(10) | ND(200) | ND(200) | ND(1.0) | **100[a]** | 1.3 | ND(50) | ND(50) |
| Trichlorofluoromethane (CFC-11) | ug/L | 2600 | 1100000 | 1100000 | ND(1.0) | ND(1.0) | ND(1.0) | ND(1.0) | ND(1.0) | ND(1.0) | ND(1.0) | ND(1.0) | ND(1.0) | ND(1.0) | ND(1.0) | ND(1.0) | ND(1.0) | ND(1.0) | ND(1.0) | ND(1.0) | ND(25) | ND(1.0) | ND(1000) | ND(1.0) | ND(10) | ND(200) | ND(200) | ND(1.0) | ND(50) | ND(1.0) | ND(50) | ND(50) |
| Vinyl acetate | ug/L | 640 | 4100000 | 8000000 | -- | -- | -- | -- | -- | -- | -- | -- | -- | -- | -- | -- | -- | -- | -- | -- | -- | -- | -- | -- | -- | -- | -- | -- | -- | -- | -- | -- |
| Vinyl chloride | ug/L | 2 | 1100 | 1000 | ND(1.0) | ND(1.0) | ND(1.0) | ND(1.0) | ND(1.0) | ND(1.0) | ND(1.0) | ND(1.0) | ND(1.0) | ND(1.0) | ND(1.0) | ND(1.0) | ND(1.0) | ND(1.0) | ND(1.0) | ND(1.0) | ND(25) | ND(1.0) | ND(1000) | ND(1.0) | ND(10) | ND(200) | ND(200) | ND(1.0) | ND(50) | ND(1.0) | ND(50) | ND(50) |
| Xylene (total) | ug/L | 280 | 190000 | 190000 | ND(3.0) | ND(3.0) | ND(3.0) | ND(3.0) | ND(3.0) | ND(3.0) | ND(3.0) | ND(3.0) | ND(3.0) | ND(3.0) | ND(3.0) | ND(3.0) | ND(3.0) | ND(3.0) | ND(3.0) | ND(3.0) | ND(75) | ND(3.0) | ND(3000) | ND(3.0) | ND(30) | ND(400) | ND(400) | 2.8 | ND(250) | ND(3.0) | ND(250) | ND(3.0) |
| trans-1,3-Dichloropropene | ug/L | 8.5 | 3900 | 5500 | ND(1.0) | ND(1.0) | ND(1.0) | ND(1.0) | ND(1.0) | ND(1.0) | ND(1.0) | ND(1.0) | ND(1.0) | ND(1.0) | ND(1.0) | ND(1.0) | ND(1.0) | ND(1.0) | ND(1.0) | ND(1.0) | ND(25) | ND(1.0) | ND(1000) | ND(1.0) | ND(10) | ND(200) | ND(200) | ND(1.0) | ND(50) | ND(1.0) | ND(50) | ND(50) |
| cis-1,3-Dichloropropene | ug/L | | | | ND(1.0) | ND(1.0) | ND(1.0) | ND(1.0) | ND(1.0) | ND(1.0) | ND(1.0) | ND(1.0) | ND(1.0) | ND(1.0) | ND(1.0) | ND(1.0) | ND(1.0) | ND(1.0) | ND(1.0) | ND(1.0) | ND(25) | ND(1.0) | ND(1000) | ND(1.0) | ND(10) | ND(200) | ND(200) | ND(1.0) | ND(50) | ND(1.0) | ND(50) | ND(50) |
| 1,3-Dichloropropene - total | ug/L | | | | ND(1.0) | ND(1.0) | ND(1.0) | ND(1.0) | ND(1.0) | ND(1.0) | ND(1.0) | ND(1.0) | ND(1.0) | ND(1.0) | ND(1.0) | ND(1.0) | ND(1.0) | ND(1.0) | ND(1.0) | ND(1.0) | ND(25) | ND(1.0) | ND(1000) | ND(1.0) | ND(10) | ND(200) | ND(200) | ND(1.0) | ND(50) | ND(1.0) | ND(50) | ND(50) |

Notes: Boxed Value - Indicates exceedence of at least one part 201 criteria, referenced by column
-- No applicable criteria or not analyzed
ID - Inadequate data to develop criteria

TABLE 1
SOIL ANALYTICAL SUMMARY, HISTORICAL VOC DATA
BROADWAY VILLAGE AT LOWER TOWN
ANN ARBOR, MICHIGAN

| Sample Location | | Michigan Act 451, Part 201 Residential and Commercial I | | | | | | | | | | | | | | | | | | | | | | | | | | |
|---|---|---|---|---|---|---|---|---|---|---|---|---|---|---|---|---|---|---|---|---|---|---|---|---|---|---|---|---|
| Sample Identification | | Residential Drinking Water Protection | Soil Volatilization to Indoor Air Inhalation | Direct Contact Criteria | AH-1 AH1 2 | AH-1 AH1 6 | AH-2 AH2 2 | AH-2 AH2 6 | AH-3 AH3 2 | AH-3 AH3 6 | AH-4 AH4 2 | AH-4 AH4 6 | AH-4 AH-4 6 | AH-5 AH5 2 | AH-5 AH5 6 | AH-6 AH6 2 | AH-6 AH6 6 | AH-7 AH7 2 | AH-7 AH-7 2 | AH-7 AH7 6 | AH-18 AH18 2 | AH-18 AH18 6 | AH-19 AH19 2 | AH-20 AH20 11 | AH-20 AH20 8 | AH-21 AH21 2 | AH-21 AH21 6 | AH-23 AH23 4 |
| Sample Date | | | | | 11/11/2002 | 11/11/2002 | 11/11/2002 | 11/11/2002 | 11/11/2002 | 11/11/2002 | 11/11/2002 | 11/11/2002 | 11/11/2002 | 11/11/2002 | 11/11/2002 | 11/11/2002 | 11/11/2002 | 11/11/2002 | 11/11/2002 | 11/12/2002 | 11/12/2002 | 11/12/2002 | 11/11/2002 | 11/11/2002 | 11/12/2002 | 11/12/2002 | 11/11/2002 |
| Sample Depth (ft bgs) | | | | | (0-2) | (0-6) | (0-2) | (0-6) | (0-2) | (0-6) | (0-2) | (0-6) | (0-6) | (0-2) | (0-6) | (0-2) | (0-6) | (0-2) | (0-2) | (0-6) | (0-2) | (0-6) | (0-2) | (0-11) | (0-8) | (0-2) | (0-6) | (0-4) |
| Sample Type | | | | | | | | | | | | | Duplicate | | | | | | Duplicate | | | | | | | | | |
| | Units | a | b | c | | | | | | | | | | | | | | | | | | | | | | | | |
| VOCs | | | | | | | | | | | | | | | | | | | | | | | | | | | | |
| 1,1,1,2-Tetrachloroethane | ug/Kg | 1500 | 6200 | 440000 | – | – | – | – | – | – | – | – | ND(100) | – | – | – | – | – | ND(100) | – | – | – | – | – | – | – | – | – |
| 1,1,1-Trichloroethane | ug/Kg | 4000 | 250000 | 460000 | – | – | – | – | – | – | – | – | ND(50) | – | – | – | – | – | ND(50) | – | – | – | – | – | – | – | – | – |
| 1,1,2,2-Tetrachloroethane | ug/Kg | 170 | 4300 | 53000 | – | – | – | – | – | – | – | – | ND(100) | – | – | – | – | – | ND(100) | – | – | – | – | – | – | – | – | – |
| 1,1,2-Trichloroethane | ug/Kg | 100 | 4600 | 180000 | – | – | – | – | – | – | – | – | ND(50) | – | – | – | – | – | ND(50) | – | – | – | – | – | – | – | – | – |
| 1,1-Dichloroethane | ug/kg | 18000 | 230000 | 890000 | – | – | – | – | – | – | – | – | ND(50) | – | – | – | – | – | ND(50) | – | – | – | – | – | – | – | – | – |
| 1,1-Dichloroethene | ug/Kg | 140 | 62 | 200000 | ND(50) | ND(50) | ND(50) | ND(50) | ND(50) | ND(50) | ND(50) | ND(50) | ND(50) | ND(50) | ND(50) | ND(50) | ND(50) | ND(50) | ND(50) | ND(50) | ND(50) | ND(50) | ND(50) | ND(50) | ND(50) | ND(50) | ND(50) | ND(50) |
| 1,1-Dichloropropene | ug/kg | | | | – | – | – | – | – | – | – | – | ND(50) | – | – | – | – | – | ND(50) | – | – | – | – | – | – | – | – | – |
| 1,2,3-Trichlorobenzene | ug/Kg | | | | – | – | – | – | – | – | – | – | ND(250) | – | – | – | – | – | ND(250) | – | – | – | – | – | – | – | – | – |
| 1,2,3-Trichloropropane | ug/Kg | 840 | ID | 830000 | – | – | – | – | – | – | – | – | ND(100) | – | – | – | – | – | ND(100) | – | – | – | – | – | – | – | – | – |
| 1,2,4-Trichlorobenzene | ug/Kg | 4200 | 1100000 | 990000 | – | – | – | – | – | – | – | – | ND(250) | – | – | – | – | – | ND(250) | – | – | – | – | – | – | – | – | – |
| 1,2,4-Trimethylbenzene | ug/Kg | 2100 | 110000 | 110000 | – | – | – | – | – | – | – | – | ND(100) | – | – | – | – | – | ND(100) | – | – | – | – | – | – | – | – | – |
| 1,2-Dibromo-3-chloropropane (DBCP) | ug/Kg | 4 | 1200 | 1200 | – | – | – | – | – | – | – | – | ND(250) | – | – | – | – | – | ND(250) | – | – | – | – | – | – | – | – | – |
| 1,2-Dibromoethane (Ethylene Dibromide) | ug/Kg | 250 | 670 | 250 | – | – | – | – | – | – | – | – | ND(50) | – | – | – | – | – | ND(50) | – | – | – | – | – | – | – | – | – |
| 1,2-Dichlorobenzene | ug/Kg | 14000 | 210000 | 210000 | – | – | – | – | – | – | – | – | ND(100) | – | – | – | – | – | ND(100) | – | – | – | – | – | – | – | – | – |
| 1,2-Dichloroethane | ug/Kg | 100 | 2100 | 91000 | – | – | – | – | – | – | – | – | ND(50) | – | – | – | – | – | ND(50) | – | – | – | – | – | – | – | – | – |
| 1,2-Dichloropropane | ug/Kg | 100 | 4000 | 140000 | – | – | – | – | – | – | – | – | ND(50) | – | – | – | – | – | ND(50) | – | – | – | – | – | – | – | – | – |
| 1,3,5-Trimethylbenzene | ug/Kg | 1800 | 94000 | 94000 | – | – | – | – | – | – | – | – | ND(100) | – | – | – | – | – | ND(100) | – | – | – | – | – | – | – | – | – |
| 1,3-Dichlorobenzene | ug/Kg | 170 | ID | 170000 | – | – | – | – | – | – | – | – | ND(100) | – | – | – | – | – | ND(100) | – | – | – | – | – | – | – | – | – |
| 1,3-Dichloropropane | ug/kg | | | | – | – | – | – | – | – | – | – | ND(50) | – | – | – | – | – | ND(50) | – | – | – | – | – | – | – | – | – |
| 1,4-Dichlorobenzene | ug/Kg | 1700 | 19000 | 400000 | – | – | – | – | – | – | – | – | ND(100) | – | – | – | – | – | ND(100) | – | – | – | – | – | – | – | – | – |
| 2,2-Dichloropropane | ug/Kg | | | | – | – | – | – | – | – | – | – | ND(50) | – | – | – | – | – | ND(50) | – | – | – | – | – | – | – | – | – |
| 2-Butanone (Methyl Ethyl Ketone) | ug/Kg | 260000 | 27000000 | 27000000 | – | – | – | – | – | – | – | – | ND(750) | – | – | – | – | – | ND(750) | – | – | – | – | – | – | – | – | – |
| 2-Chloroethyl vinyl ether | ug/Kg | ID | ID | ID | – | – | – | – | – | – | – | – | ND(5000) | – | – | – | – | – | ND(5000) | – | – | – | – | – | – | – | – | – |
| 2-Chlorotoluene | ug/Kg | 3300 | 270000 | 500000 | – | – | – | – | – | – | – | – | ND(50) | – | – | – | – | – | ND(50) | – | – | – | – | – | – | – | – | – |
| 2-Hexanone | ug/Kg | 20000 | 990000 | 2500000 | – | – | – | – | – | – | – | – | ND(2500) | – | – | – | – | – | ND(2500) | – | – | – | – | – | – | – | – | – |
| 2-Methylnaphthalene | ug/Kg | 57000 | ID | 8100000 | – | – | – | – | – | – | – | – | ND(250) | – | – | – | – | – | ND(250) | – | – | – | – | – | – | – | – | – |
| 2-Phenylbutane (sec-Butylbenzene) | ug/Kg | 1600 | ID | 2500000 | – | – | – | – | – | – | – | – | ND(50) | – | – | – | – | – | ND(50) | – | – | – | – | – | – | – | – | – |
| 4-Chlorotoluene | ug/kg | | | | – | – | – | – | – | – | – | – | ND(50) | – | – | – | – | – | ND(50) | – | – | – | – | – | – | – | – | – |
| 4-Methyl-2-Pentanone (Methyl Isobutyl Ketone) | ug/Kg | 36000 | 2700000 | 2700000 | – | – | – | – | – | – | – | – | ND(2500) | – | – | – | – | – | ND(2500) | – | – | – | – | – | – | – | – | – |
| Acetone | ug/Kg | 15000 | 110000000 | 23000000 | – | – | – | – | – | – | – | – | ND(750) | – | – | – | – | – | ND(750) | – | – | – | – | – | – | – | – | – |
| Acrolein | ug/kg | 2400 | 410 | 3600000 | – | – | – | – | – | – | – | – | ND(50) | – | – | – | – | – | ND(50) | – | – | – | – | – | – | – | – | – |
| Acrylonitrile | ug/Kg | 52 | 6600 | 16000 | – | – | – | – | – | – | – | – | ND(2500) | – | – | – | – | – | ND(2500) | – | – | – | – | – | – | – | – | – |
| Benzene | ug/Kg | 100 | 1600 | 180000 | – | – | – | – | – | – | – | – | ND(50) | – | – | – | – | – | ND(50) | – | – | – | – | – | – | – | – | – |
| Bromobenzene | ug/Kg | 550 | 310000 | 540000 | – | – | – | – | – | – | – | – | ND(100) | – | – | – | – | – | ND(100) | – | – | – | – | – | – | – | – | – |
| Bromodichloromethane | ug/Kg | 2000 | 1200 | 110000 | – | – | – | – | – | – | – | – | ND(100) | – | – | – | – | – | ND(100) | – | – | – | – | – | – | – | – | – |
| Bromoform | ug/Kg | 2000 | 150000 | 820000 | – | – | – | – | – | – | – | – | ND(100) | – | – | – | – | – | ND(100) | – | – | – | – | – | – | – | – | – |
| Bromomethane (Methyl Bromide) | ug/Kg | 200 | 860 | 320000 | – | – | – | – | – | – | – | – | ND(250) | – | – | – | – | – | ND(250) | – | – | – | – | – | – | – | – | – |
| Carbon disulfide | ug/Kg | 16000 | 76000 | 280000 | – | – | – | – | – | – | – | – | ND(250) | – | – | – | – | – | ND(250) | – | – | – | – | – | – | – | – | – |
| Carbon tetrachloride | ug/Kg | 100 | 190 | 96000 | – | – | – | – | – | – | – | – | ND(50) | – | – | – | – | – | ND(50) | – | – | – | – | – | – | – | – | – |
| Chlorobenzene | ug/Kg | 2000 | 120000 | 260000 | – | – | – | – | – | – | – | – | ND(50) | – | – | – | – | – | ND(50) | – | – | – | – | – | – | – | – | – |
| Chlorobromomethane | ug/Kg | | | | – | – | – | – | – | – | – | – | ND(100) | – | – | – | – | – | ND(100) | – | – | – | – | – | – | – | – | – |
| Chloroethane | ug/Kg | 8600 | 950000 | 950000 | – | – | – | – | – | – | – | – | ND(250) | – | – | – | – | – | ND(250) | – | – | – | – | – | – | – | – | – |
| Chloroform (Trichloromethane) | ug/Kg | 2000 | 7200 | 1200000 | – | – | – | – | – | – | – | – | ND(50) | – | – | – | – | – | ND(50) | – | – | – | – | – | – | – | – | – |
| Chloromethane (Methyl Chloride) | ug/Kg | 5200 | 2300 | 1100000 | – | – | – | – | – | – | – | – | ND(250) | – | – | – | – | – | ND(250) | – | – | – | – | – | – | – | – | – |
| cis-1,2-Dichloroethene | ug/Kg | 1400 | 22000 | 640000 | 50 | ND(50) | ND(50) | ND(50) | ND(50) | ND(50) | ND(50) | ND(50) | ND(50) | ND(50) | ND(50) | ND(50) | ND(50) | ND(50) | ND(50) | ND(50) | ND(50) | ND(50) | ND(50) | ND(50) | ND(50) | ND(50) | ND(50) | ND(50) |
| Cymene (p-Isopropyltoluene) | ug/Kg | | | | – | – | – | – | – | – | – | – | – | – | – | – | – | – | – | – | – | – | – | – | – | – | – | – |
| Dibromochloromethane | ug/Kg | 2000 | 3900 | 110000 | – | – | – | – | – | – | – | – | ND(100) | – | – | – | – | – | ND(100) | – | – | – | – | – | – | – | – | – |
| Dibromomethane | ug/Kg | 1600 | ID | 2000000 | – | – | – | – | – | – | – | – | ND(100) | – | – | – | – | – | ND(100) | – | – | – | – | – | – | – | – | – |
| Dichlorodifluoromethane (CFC-12) | ug/Kg | 95000 | 900000 | 1000000 | – | – | – | – | – | – | – | – | ND(250) | – | – | – | – | – | ND(250) | – | – | – | – | – | – | – | – | – |
| Ethyl Ether | ug/Kg | 200 | 7400000 | 7400000 | – | – | – | – | – | – | – | – | – | – | – | – | – | – | – | – | – | – | – | – | – | – | – | – |
| Ethylbenzene | ug/Kg | 1500 | 87000 | 140000 | – | – | – | – | – | – | – | – | ND(50) | – | – | – | – | – | ND(50) | – | – | – | – | – | – | – | – | – |
| Hexachlorobutadiene | ug/kg | 26000 | 130000 | 100000 | – | – | – | – | – | – | – | – | ND(50) | – | – | – | – | – | ND(50) | – | – | – | – | – | – | – | – | – |
| Hexachloroethane | ug/Kg | 430 | 40000 | 230000 | – | – | – | – | – | – | – | – | – | – | – | – | – | – | – | – | – | – | – | – | – | – | – | – |
| Iodomethane | ug/Kg | | | | – | – | – | – | – | – | – | – | ND(100) | – | – | – | – | – | ND(100) | – | – | – | – | – | – | – | – | – |
| Isopropylbenzene | ug/Kg | 91000 | 390000 | 390000 | – | – | – | – | – | – | – | – | ND(250) | – | – | – | – | – | ND(250) | – | – | – | – | – | – | – | – | – |
| Isopropyltoluene | ug/kg | | | | – | – | – | – | – | – | – | – | – | – | – | – | – | – | – | – | – | – | – | – | – | – | – | – |
| Methyl Tert Butyl Ether | ug/Kg | 800 | 5900000 | 1500000 | – | – | – | – | – | – | – | – | ND(250) | – | – | – | – | – | ND(250) | – | – | – | – | – | – | – | – | – |
| Methylene chloride | ug/Kg | 100 | 45000 | 1300000 | – | – | – | – | – | – | – | – | ND(250) | – | – | – | – | – | ND(250) | – | – | – | – | – | – | – | – | – |
| Naphthalene | ug/Kg | 35000 | 250000 | 16000000 | – | – | – | – | – | – | – | – | ND(250) | – | – | – | – | – | ND(250) | – | – | – | – | – | – | – | – | – |
| n-Butylbenzene | ug/Kg | 1600 | ID | 2500000 | – | – | – | – | – | – | – | – | ND(50) | – | – | – | – | – | ND(50) | – | – | – | – | – | – | – | – | – |
| n-Propylbenzene | ug/Kg | 1600 | ID | 2500000 | – | – | – | – | – | – | – | – | ND(100) | – | – | – | – | – | ND(100) | – | – | – | – | – | – | – | – | – |
| Styrene | ug/Kg | 2700 | 250000 | 400000 | – | – | – | – | – | – | – | – | ND(50) | – | – | – | – | – | ND(50) | – | – | – | – | – | – | – | – | – |
| tert-Butylbenzene | ug/Kg | 1600 | ID | 2500000 | – | – | – | – | – | – | – | – | ND(50) | – | – | – | – | – | ND(50) | – | – | – | – | – | – | – | – | – |
| Tetrachloroethene | ug/Kg | 100 | 11000 | 88000 | ND(50) | ND(50) | 95 | 159* | ND(50) | ND(50) | 149* | 420* | 440* | 99 | 818* | 218* | 1119* | 311* | 1700* | 278* | 648* | 1278* | ND(50) | ND(50) | ND(50) | ND(50) | 43 | ND(50) |
| Tetrahydrofuran | ug/Kg | 1900 | 1300000 | 2900000 | – | – | – | – | – | – | – | – | – | – | – | – | – | – | – | – | – | – | – | – | – | – | – | – |
| Toluene | ug/Kg | 16000 | 250000 | 250000 | – | – | – | – | – | – | – | – | ND(50) | – | – | – | – | – | ND(50) | – | – | – | – | – | – | – | – | – |
| trans-1,2-Dichloroethene | ug/Kg | 2000 | 23000 | 1400000 | ND(50) | ND(50) | ND(50) | ND(50) | ND(50) | ND(50) | ND(50) | ND(50) | ND(50) | ND(50) | ND(50) | ND(50) | ND(50) | ND(50) | ND(50) | ND(50) | ND(50) | ND(50) | ND(50) | ND(50) | ND(50) | ND(50) | ND(50) | ND(50) |
| trans-1,4-Dichloro-2-butene | ug/Kg | | | | – | – | – | – | – | – | – | – | – | – | – | – | – | – | – | – | – | – | – | – | – | – | – | – |
| Trichloroethene | ug/Kg | 100 | 7100 | 500000 | ND(50) | ND(50) | ND(50) | ND(50) | ND(50) | ND(50) | ND(50) | ND(50) | ND(50) | ND(50) | ND(50) | ND(50) | ND(50) | ND(50) | ND(50) | ND(50) | ND(50) | ND(50) | ND(50) | ND(50) | ND(50) | ND(50) | ND(50) | ND(50) |
| Trichlorofluoromethane (CFC-11) | ug/Kg | 52000 | 560000 | 560000 | – | – | – | – | – | – | – | – | ND(100) | – | – | – | – | – | ND(100) | – | – | – | – | – | – | – | – | – |
| Vinyl acetate | ug/kg | 13000 | 790000 | 2400000 | – | – | – | – | – | – | – | – | ND(2500) | – | – | – | – | – | ND(2500) | – | – | – | – | – | – | – | – | – |
| Vinyl chloride | ug/Kg | 40 | 270 | 3800 | ND(50) | ND(50) | ND(50) | ND(50) | ND(50) | ND(50) | ND(50) | ND(50) | ND(100) | ND(50) | ND(50) | ND(50) | ND(50) | ND(50) | ND(100) | ND(50) | ND(50) | ND(50) | ND(50) | ND(50) | ND(50) | ND(50) | ND(50) | ND(50) |
| Xylene (total) | ug/Kg | 5600 | 150000 | 150000 | – | – | – | – | – | – | – | – | ND(150) | – | – | – | – | – | ND(150) | – | – | – | – | – | – | – | – | – |
| trans-1,3-Dichloropropene | ug/Kg | | | | – | – | – | – | – | – | – | – | ND(50) | – | – | – | – | – | ND(50) | – | – | – | – | – | – | – | – | – |
| cis-1,3-Dichloropropene | ug/Kg | | | | – | – | – | – | – | – | – | – | ND(50) | – | – | – | – | – | ND(50) | – | – | – | – | – | – | – | – | – |
| 1,3-Dichloropropene (total) | ug/Kg | 170 | 1000 | 10000 | – | – | – | – | – | – | – | – | ND(50) | – | – | – | – | – | ND(50) | – | – | – | – | – | – | – | – | – |

Notes: Boxed Value - Indicates exceedence of applicable Part 201 criteria
Dashed Line - No applicable criteria or not analyzed

TABLE 1
SOIL ANALYTICAL SUMMARY, HISTORICAL VOC DATA
BROADWAY VILLAGE AT LOWER TOWN
ANN ARBOR, MICHIGAN

| Sample Location | | Michigan Act 451, Part 201 Residential and Commercial I | | | | | | | | | | | | | | | | | | | | | | | | | | |
|---|---|---|---|---|---|---|---|---|---|---|---|---|---|---|---|---|---|---|---|---|---|---|---|---|---|---|---|---|
| Sample Identification | | Residential Drinking Water Protection | Soil Volatilization to Indoor Air Inhalation | Direct Contact Criteria | AH-24 | AH-24 | AH-24 | AH-25 | AH-25 | AH-25 | AH-26 | AH-26 | AH-26 | AH-27 | AH-27 | AH-27 | AH-27 | AH-28 | AH-28 | AH-28 | AH-29 | AH-29 | AH-30 | AH-30 | AH-31 | AH-31 | AH-32 | AH-32 |
| Sample Date | | | | | AH24 10 | AH24 2 | AH24 6 | AH25 2 | AH25 14 | AH25 6 | AH26 12 | AH26 2 | AH26 6 | AH27 11 | AH27 2 | AH27 4 | AH27 7 | AH28 10 | AH28 2 | AH28 6 | AH29 2 | AH29 6 | AH30 2 | AH30 6 | AH31 2 | AH31 6 | AH32 10 | AH32 2 |
| Sample Depth (ft bgs) | | | | | 11/12/2002 | 11/12/2002 | 11/12/2002 | 11/12/2002 | 11/13/2002 | 11/13/2002 | 11/13/2002 | 11/13/2002 | 11/13/2002 | 11/13/2002 | 11/13/2002 | 11/13/2002 | 11/13/2002 | 11/13/2002 | 11/13/2002 | 11/13/2002 | 11/13/2002 | 11/13/2002 | 11/13/2002 | 11/13/2002 | 11/12/2002 | 11/12/2002 | 11/13/2002 | 11/13/2002 |
| Sample Type | | | | | (0-10) | (0-2) | (0-6) | (0-2) | (0-14) | (0-6) | (0-12) | (0-2) | (0-6) | (0-11) | (0-2) | (0-4) | (0-7) | (0-10) | (0-2) | (0-6) | (0-2) | (0-6) | (0-2) | (0-6) | (0-2) | (0-6) | (0-10) | (0-2) |
| | Units | a | b | c | | | | | | | | | | | | | | | | | | | | | | | | |
| *VOCs* | | | | | | | | | | | | | | | | | | | | | | | | | | | | |
| 1,1,1,2-Tetrachloroethane | ug/Kg | 1500 | 6200 | 440000 | – | – | – | – | – | – | – | – | – | – | – | – | – | – | – | – | – | – | – | – | – | – | – | – |
| 1,1,1-Trichloroethane | ug/Kg | 4000 | 250000 | 460000 | – | – | – | – | – | – | – | – | – | – | – | – | – | – | – | – | – | – | – | – | – | – | – | – |
| 1,1,2,2-Tetrachloroethane | ug/Kg | 170 | 4300 | 53000 | – | – | – | – | – | – | – | – | – | – | – | – | – | – | – | – | – | – | – | – | – | – | – | – |
| 1,1,2-Trichloroethane | ug/Kg | 100 | 4600 | 180000 | – | – | – | – | – | – | – | – | – | – | – | – | – | – | – | – | – | – | – | – | – | – | – | – |
| 1,1-Dichloroethane | ug/kg | 18000 | 230000 | 890000 | – | – | – | – | – | – | – | – | – | – | – | – | – | – | – | – | – | – | – | – | – | – | – | – |
| 1,1-Dichloroethene | ug/Kg | 140 | 62 | 200000 | ND(50) | ND(50) | ND(50) | ND(50) | ND(50) | ND(50) | ND(50) | ND(50) | ND(50) | ND(50) | ND(50) | ND(50) | ND(50) | ND(50) | ND(50) | ND(50) | ND(50) | ND(50) | ND(50) | ND(50) | ND(50) | ND(50) | ND(50) | ND(50) |
| 1,1-Dichloropropene | ug/kg | | | | – | – | – | – | – | – | – | – | – | – | – | – | – | – | – | – | – | – | – | – | – | – | – | – |
| 1,2,3-Trichlorobenzene | ug/Kg | | | | – | – | – | – | – | – | – | – | – | – | – | – | – | – | – | – | – | – | – | – | – | – | – | – |
| 1,2,3-Trichloropropane | ug/Kg | 840 | ID | 830000 | – | – | – | – | – | – | – | – | – | – | – | – | – | – | – | – | – | – | – | – | – | – | – | – |
| 1,2,4-Trichlorobenzene | ug/Kg | 4200 | 1100000 | 990000 | – | – | – | – | – | – | – | – | – | – | – | – | – | – | – | – | – | – | – | – | – | – | – | – |
| 1,2,4-Trimethylbenzene | ug/Kg | 2100 | 110000 | 110000 | – | – | – | – | – | – | – | – | – | – | – | – | – | – | – | – | – | – | – | – | – | – | – | – |
| 1,2-Dibromo-3-chloropropane (DBCP) | ug/Kg | 4 | 1200 | 1200 | – | – | – | – | – | – | – | – | – | – | – | – | – | – | – | – | – | – | – | – | – | – | – | – |
| 1,2-Dibromoethane (Ethylene Dibromide) | ug/Kg | 250 | 670 | 250 | – | – | – | – | – | – | – | – | – | – | – | – | – | – | – | – | – | – | – | – | – | – | – | – |
| 1,2-Dichlorobenzene | ug/Kg | 14000 | 210000 | 210000 | – | – | – | – | – | – | – | – | – | – | – | – | – | – | – | – | – | – | – | – | – | – | – | – |
| 1,2-Dichloroethane | ug/Kg | 100 | 2100 | 91000 | – | – | – | – | – | – | – | – | – | – | – | – | – | – | – | – | – | – | – | – | – | – | – | – |
| 1,2-Dichloropropane | ug/Kg | 100 | 4000 | 140000 | – | – | – | – | – | – | – | – | – | – | – | – | – | – | – | – | – | – | – | – | – | – | – | – |
| 1,3,5-Trimethylbenzene | ug/Kg | 1800 | 94000 | 94000 | – | – | – | – | – | – | – | – | – | – | – | – | – | – | – | – | – | – | – | – | – | – | – | – |
| 1,3-Dichlorobenzene | ug/Kg | 170 | ID | 170000 | – | – | – | – | – | – | – | – | – | – | – | – | – | – | – | – | – | – | – | – | – | – | – | – |
| 1,3-Dichloropropane | ug/kg | | | | – | – | – | – | – | – | – | – | – | – | – | – | – | – | – | – | – | – | – | – | – | – | – | – |
| 1,4-Dichlorobenzene | ug/Kg | 1700 | 19000 | 400000 | – | – | – | – | – | – | – | – | – | – | – | – | – | – | – | – | – | – | – | – | – | – | – | – |
| 2,2-Dichloropropane | ug/kg | | | | – | – | – | – | – | – | – | – | – | – | – | – | – | – | – | – | – | – | – | – | – | – | – | – |
| 2-Butanone (Methyl Ethyl Ketone) | ug/Kg | 260000 | 27000000 | 27000000 | – | – | – | – | – | – | – | – | – | – | – | – | – | – | – | – | – | – | – | – | – | – | – | – |
| 2-Chloroethyl vinyl ether | ug/kg | ID | ID | ID | – | – | – | – | – | – | – | – | – | – | – | – | – | – | – | – | – | – | – | – | – | – | – | – |
| 2-Chlorotoluene | ug/kg | 3300 | 270000 | 500000 | – | – | – | – | – | – | – | – | – | – | – | – | – | – | – | – | – | – | – | – | – | – | – | – |
| 2-Hexanone | ug/Kg | 20000 | 990000 | 2500000 | – | – | – | – | – | – | – | – | – | – | – | – | – | – | – | – | – | – | – | – | – | – | – | – |
| 2-Methylnaphthalene | ug/Kg | 57000 | ID | 8100000 | – | – | – | – | – | – | – | – | – | – | – | – | – | – | – | – | – | – | – | – | – | – | – | – |
| 2-Phenylbutane (sec-Butylbenzene) | ug/Kg | 1600 | ID | 2500000 | – | – | – | – | – | – | – | – | – | – | – | – | – | – | – | – | – | – | – | – | – | – | – | – |
| 4-Chlorotoluene | ug/kg | | | | – | – | – | – | – | – | – | – | – | – | – | – | – | – | – | – | – | – | – | – | – | – | – | – |
| 4-Methyl-2-Pentanone (Methyl Isobutyl Ketone) | ug/Kg | 36000 | 2700000 | 2700000 | – | – | – | – | – | – | – | – | – | – | – | – | – | – | – | – | – | – | – | – | – | – | – | – |
| Acetone | ug/Kg | 15000 | 110000000 | 23000000 | – | – | – | – | – | – | – | – | – | – | – | – | – | – | – | – | – | – | – | – | – | – | – | – |
| Acrolein | ug/Kg | 2400 | 410 | 3600000 | – | – | – | – | – | – | – | – | – | – | – | – | – | – | – | – | – | – | – | – | – | – | – | – |
| Acrylonitrile | ug/Kg | 52 | 6600 | 16000 | – | – | – | – | – | – | – | – | – | – | – | – | – | – | – | – | – | – | – | – | – | – | – | – |
| Benzene | ug/Kg | 100 | 1600 | 180000 | – | – | – | – | – | – | – | – | – | – | – | – | – | – | – | – | – | – | – | – | – | – | – | – |
| Bromobenzene | ug/Kg | 550 | 310000 | 540000 | – | – | – | – | – | – | – | – | – | – | – | – | – | – | – | – | – | – | – | – | – | – | – | – |
| Bromodichloromethane | ug/Kg | 2000 | 1200 | 110000 | – | – | – | – | – | – | – | – | – | – | – | – | – | – | – | – | – | – | – | – | – | – | – | – |
| Bromoform | ug/Kg | 2000 | 150000 | 820000 | – | – | – | – | – | – | – | – | – | – | – | – | – | – | – | – | – | – | – | – | – | – | – | – |
| Bromomethane (Methyl Bromide) | ug/Kg | 200 | 860 | 320000 | – | – | – | – | – | – | – | – | – | – | – | – | – | – | – | – | – | – | – | – | – | – | – | – |
| Carbon disulfide | ug/Kg | 16000 | 76000 | 280000 | – | – | – | – | – | – | – | – | – | – | – | – | – | – | – | – | – | – | – | – | – | – | – | – |
| Carbon tetrachloride | ug/Kg | 100 | 190 | 96000 | – | – | – | – | – | – | – | – | – | – | – | – | – | – | – | – | – | – | – | – | – | – | – | – |
| Chlorobenzene | ug/Kg | 2000 | 120000 | 260000 | – | – | – | – | – | – | – | – | – | – | – | – | – | – | – | – | – | – | – | – | – | – | – | – |
| Chlorobromomethane | ug/Kg | | | | – | – | – | – | – | – | – | – | – | – | – | – | – | – | – | – | – | – | – | – | – | – | – | – |
| Chloroethane | ug/Kg | 8600 | 950000 | 950000 | – | – | – | – | – | – | – | – | – | – | – | – | – | – | – | – | – | – | – | – | – | – | – | – |
| Chloroform (Trichloromethane) | ug/Kg | 2000 | 7200 | 1200000 | – | – | – | – | – | – | – | – | – | – | – | – | – | – | – | – | – | – | – | – | – | – | – | – |
| Chloromethane (Methyl Chloride) | ug/Kg | 5200 | 2300 | 1100000 | – | – | – | – | – | – | – | – | – | – | – | – | – | – | – | – | – | – | – | – | – | – | – | – |
| cis-1,2-Dichloroethene | ug/Kg | 1400 | 22000 | 640000 | ND(50) | ND(50) | ND(50) | ND(50) | ND(50) | ND(50) | ND(50) | ND(50) | ND(50) | ND(50) | ND(50) | ND(50) | ND(50) | ND(50) | ND(50) | ND(50) | ND(50) | ND(50) | ND(50) | ND(50) | ND(50) | ND(50) | ND(50) | ND(50) |
| Cymene (p-Isopropyltoluene) | ug/Kg | | | | – | – | – | – | – | – | – | – | – | – | – | – | – | – | – | – | – | – | – | – | – | – | – | – |
| Dibromochloromethane | ug/Kg | 2000 | 3900 | 110000 | – | – | – | – | – | – | – | – | – | – | – | – | – | – | – | – | – | – | – | – | – | – | – | – |
| Dibromomethane | ug/Kg | 1600 | ID | 2000000 | – | – | – | – | – | – | – | – | – | – | – | – | – | – | – | – | – | – | – | – | – | – | – | – |
| Dichlorodifluoromethane (CFC-12) | ug/Kg | 95000 | 900000 | 1000000 | – | – | – | – | – | – | – | – | – | – | – | – | – | – | – | – | – | – | – | – | – | – | – | – |
| Ethyl Ether | ug/Kg | 200 | 7400000 | 7400000 | – | – | – | – | – | – | – | – | – | – | – | – | – | – | – | – | – | – | – | – | – | – | – | – |
| Ethylbenzene | ug/Kg | 1500 | 87000 | 140000 | – | – | – | – | – | – | – | – | – | – | – | – | – | – | – | – | – | – | – | – | – | – | – | – |
| Hexachlorobutadiene | ug/kg | 26000 | 130000 | 100000 | – | – | – | – | – | – | – | – | – | – | – | – | – | – | – | – | – | – | – | – | – | – | – | – |
| Hexachloroethane | ug/Kg | 430 | 40000 | 230000 | – | – | – | – | – | – | – | – | – | – | – | – | – | – | – | – | – | – | – | – | – | – | – | – |
| Iodomethane | ug/Kg | | | | – | – | – | – | – | – | – | – | – | – | – | – | – | – | – | – | – | – | – | – | – | – | – | – |
| Isopropylbenzene | ug/Kg | 91000 | 390000 | 390000 | – | – | – | – | – | – | – | – | – | – | – | – | – | – | – | – | – | – | – | – | – | – | – | – |
| Isopropyltoluene | ug/kg | | | | – | – | – | – | – | – | – | – | – | – | – | – | – | – | – | – | – | – | – | – | – | – | – | – |
| Methyl Tert Butyl Ether | ug/Kg | 800 | 5900000 | 1500000 | – | – | – | – | – | – | – | – | – | – | – | – | – | – | – | – | – | – | – | – | – | – | – | – |
| Methylene chloride | ug/Kg | 100 | 45000 | 1300000 | – | – | – | – | – | – | – | – | – | – | – | – | – | – | – | – | – | – | – | – | – | – | – | – |
| Naphthalene | ug/Kg | 35000 | 250000 | 16000000 | – | – | – | – | – | – | – | – | – | – | – | – | – | – | – | – | – | – | – | – | – | – | – | – |
| n-Butylbenzene | ug/Kg | 1600 | ID | 2500000 | – | – | – | – | – | – | – | – | – | – | – | – | – | – | – | – | – | – | – | – | – | – | – | – |
| n-Propylbenzene | ug/Kg | 1600 | ID | 2500000 | – | – | – | – | – | – | – | – | – | – | – | – | – | – | – | – | – | – | – | – | – | – | – | – |
| Styrene | ug/Kg | 2700 | 250000 | 400000 | – | – | – | – | – | – | – | – | – | – | – | – | – | – | – | – | – | – | – | – | – | – | – | – |
| tert-Butylbenzene | ug/Kg | 1600 | ID | 2500000 | – | – | – | – | – | – | – | – | – | – | – | – | – | – | – | – | – | – | – | – | – | – | – | – |
| Tetrachloroethene | ug/Kg | 100 | 11000 | 88000 | ND(50) | ND(50) | ND(50) | ND(50) | ND(50) | ND(50) | ND(50) | ND(50) | ND(50) | ND(50) | ND(50) | ND(50) | ND(50) | ND(50) | ND(50) | ND(50) | ND(50) | ND(50) | 946* | 1020* | 66 | ND(50) | 194* | 123* |
| Tetrahydrofuran | ug/Kg | 1900 | 1300000 | 2900000 | – | – | – | – | – | – | – | – | – | – | – | – | – | – | – | – | – | – | – | – | – | – | – | – |
| Toluene | ug/Kg | 16000 | 250000 | 250000 | – | – | – | – | – | – | – | – | – | – | – | – | – | – | – | – | – | – | – | – | – | – | – | – |
| trans-1,2-Dichloroethene | ug/Kg | 2000 | 23000 | 1400000 | ND(50) | ND(50) | ND(50) | ND(50) | ND(50) | ND(50) | ND(50) | ND(50) | ND(50) | ND(50) | ND(50) | ND(50) | ND(50) | ND(50) | ND(50) | ND(50) | ND(50) | ND(50) | ND(50) | ND(50) | ND(50) | ND(50) | ND(50) | ND(50) |
| trans-1,4-Dichloro-2-butene | ug/Kg | | | | – | – | – | – | – | – | – | – | – | – | – | – | – | – | – | – | – | – | – | – | – | – | – | – |
| Trichloroethene | ug/Kg | 100 | 7100 | 500000 | ND(50) | ND(50) | ND(50) | ND(50) | ND(50) | ND(50) | ND(50) | ND(50) | ND(50) | ND(50) | ND(50) | ND(50) | ND(50) | ND(50) | ND(50) | ND(50) | ND(50) | ND(50) | ND(50) | ND(50) | ND(50) | ND(50) | ND(50) | ND(50) |
| Trichlorofluoromethane (CFC-11) | ug/Kg | 52000 | 560000 | 560000 | – | – | – | – | – | – | – | – | – | – | – | – | – | – | – | – | – | – | – | – | – | – | – | – |
| Vinyl acetate | ug/Kg | 13000 | 790000 | 2400000 | – | – | – | – | – | – | – | – | – | – | – | – | – | – | – | – | – | – | – | – | – | – | – | – |
| Vinyl chloride | ug/Kg | 40 | 270 | 3800 | ND(50) | ND(50) | ND(50) | ND(50) | ND(50) | ND(50) | ND(50) | ND(50) | ND(50) | ND(50) | ND(50) | ND(50) | ND(50) | ND(50) | ND(50) | ND(50) | ND(50) | ND(50) | ND(50) | ND(50) | ND(50) | ND(50) | ND(50) | ND(50) |
| Xylene (total) | ug/Kg | 5600 | 150000 | 150000 | – | – | – | – | – | – | – | – | – | – | – | – | – | – | – | – | – | – | – | – | – | – | – | – |
| trans-1,3-Dichloropropene | ug/Kg | | | | – | – | – | – | – | – | – | – | – | – | – | – | – | – | – | – | – | – | – | – | – | – | – | – |
| cis-1,3-Dichloropropene | ug/Kg | | | | – | – | – | – | – | – | – | – | – | – | – | – | – | – | – | – | – | – | – | – | – | – | – | – |
| 1,3-Dichloropropene (total) | ug/Kg | 170 | 1000 | 10000 | – | – | – | – | – | – | – | – | – | – | – | – | – | – | – | – | – | – | – | – | – | – | – | – |

Notes: Boxed Value - Indicates exceedence of applicable Part 201 criteria
Dashed Line - No applicable criteria or not analyzed
ID - Inadequate data to develop criteria

TABLE 1
SOIL ANALYTICAL SUMMARY, HISTORICAL VOC DATA
BROADWAY VILLAGE AT LOWER TOWN
ANN ARBOR, MICHIGAN

| Sample Location | | Michigan Act 451, Part 201 Residential and Commercial I | | | AH-32 | AH-33 | AH-33 | AH-34 | AH-35 | AH-35 | AH-35 | AH-40 | AH-40 | AH-41 | AH-41 | AH-41 | AH-41 | AH-42 | AH-42 | AH-42 | AH-47 | AHI-SB-14 | GP-1 | GP-1 | GP-2 | GP-2 | GP-3 | GP-3 |
|---|---|---|---|---|---|---|---|---|---|---|---|---|---|---|---|---|---|---|---|---|---|---|---|---|---|---|---|---|
| Sample Identification | | Residential | Soil Volatilization | Direct Contact | AH32 6 | AH33 2 | AH33 6 | AH 34 | AH35 10 | AH35 2 | AH35 6 | AH40 4 | AH40 8 | AH41 10 | AH41 2 | AH41 6 | AH-41 6 | AH42 2 | AH42 6 | AH42 9 | AH 47 | AHI-SB-14-8 | GP-1 | GP-1 | GP-2 | GP-2 | GP-3 | GP-3 |
| Sample Date | | Drinking Water | to Indoor Air | Criteria | 11/13/2002 | 11/13/2002 | 11/13/2002 | 12/10/2002 | 11/11/2002 | 11/11/2002 | 11/11/2002 | 11/11/2002 | 11/11/2002 | 11/12/2002 | 11/12/2002 | 11/12/2002 | 11/12/2002 | 11/12/2002 | 11/12/2002 | 11/12/2002 | 12/10/2002 | 11/20/2001 | 7/11/2002 | 7/11/2002 | 7/11/2002 | 7/11/2002 | 7/12/2002 | 7/12/2002 |
| Sample Depth (ft bgs) | | Protection | Inhalation | | (0-6) | (0-2) | (0-6) | (0-11.5) | (0-10) | (0-2) | (0-6) | (0-4) | (0-8) | (0-10) | (0-2) | (0-6) | (0-6) | (0-2) | (0-6) | (0-9) | (0-10) | (0-8) | (12-13) | (13-14) | (13-14) | (14-15) | (10-11) | (11-12) |
| Sample Type | | a | b | c | | | | | | | | | | | | | | | | | | | | | | | | |
| | Units | | | | | | | | | | | | | | | | | | | | | | | | | | | |
| *VOCs* | | | | | | | | | | | | | | | | | | | | | | | | | | | | |
| 1,1,1,2-Tetrachloroethane | ug/Kg | 1500 | 6200 | 440000 | – | – | – | ND(100) | – | – | – | – | – | – | – | – | ND(100) | – | – | – | ND(100) | ND(100) | ND(50) | ND(53) | ND(240) | ND(200) | ND(49) | ND(54) |
| 1,1,1-Trichloroethane | ug/Kg | 4000 | 250000 | 460000 | – | – | – | ND(50) | – | – | – | – | – | – | – | – | ND(50) | – | – | – | ND(50) | ND(50) | ND(50) | ND(53) | ND(240) | ND(200) | ND(49) | ND(54) |
| 1,1,2,2-Tetrachloroethane | ug/Kg | 170 | 4300 | 53000 | – | – | – | ND(100) | – | – | – | – | – | – | – | – | ND(100) | – | – | – | ND(100) | ND(100) | ND(50) | ND(53) | ND(240) | ND(200) | ND(49) | ND(54) |
| 1,1,2-Trichloroethane | ug/Kg | 100 | 4600 | 180000 | – | – | – | ND(50) | – | – | – | – | – | – | – | – | ND(50) | – | – | – | ND(50) | ND(50) | ND(50) | ND(53) | ND(240) | ND(200) | ND(49) | ND(54) |
| 1,1-Dichloroethane | ug/kg | 18000 | 230000 | 890000 | – | – | – | ND(50) | – | – | – | – | – | – | – | – | ND(50) | – | – | – | ND(50) | ND(50) | – | – | – | – | – | – |
| 1,1-Dichloroethene | ug/Kg | 140 | 62 | 200000 | ND(50) | ND(50) | ND(50) | ND(50) | ND(50) | ND(50) | ND(50) | ND(50) | ND(50) | ND(50) | ND(50) | ND(50) | ND(50) | ND(50) | ND(50) | ND(50) | ND(50) | ND(50) | ND(50) | ND(53) | ND(240) | ND(200) | ND(49) | ND(54) |
| 1,1-Dichloropropene | ug/kg | | | | – | – | – | ND(50) | – | – | – | – | – | – | – | – | ND(50) | – | – | – | ND(50) | ND(50) | – | – | – | – | – | – |
| 1,2,3-Trichlorobenzene | ug/Kg | | | | – | – | – | ND(250) | – | – | – | – | – | – | – | – | ND(250) | – | – | – | ND(250) | ND(330) | ND(250) | ND(260) | ND(1200) | ND(980) | ND(250) | ND(270) |
| 1,2,3-Trichloropropane | ug/Kg | 840 | ID | 830000 | – | – | – | ND(100) | – | – | – | – | – | – | – | – | ND(100) | – | – | – | ND(100) | ND(100) | ND(50) | ND(53) | ND(240) | ND(200) | ND(49) | ND(54) |
| 1,2,4-Trichlorobenzene | ug/Kg | 4200 | 1100000 | 990000 | – | – | – | ND(250) | – | – | – | – | – | – | – | – | ND(250) | – | – | – | ND(250) | ND(330) | ND(250) | ND(260) | ND(1200) | ND(980) | ND(250) | ND(270) |
| 1,2,4-Trimethylbenzene | ug/Kg | 2100 | 110000 | 110000 | – | – | – | ND(100) | – | – | – | – | – | – | – | – | ND(100) | – | – | – | ND(100) | ND(100) | ND(50) | ND(53) | ND(240) | ND(200) | ND(49) | ND(54) |
| 1,2-Dibromo-3-chloropropane (DBCP) | ug/Kg | 4 | 1200 | 1200 | – | – | – | ND(250) | – | – | – | – | – | – | – | – | ND(250) | – | – | – | ND(250) | ND(250) | ND(250) | ND(260) | ND(1200) | ND(980) | ND(250) | ND(270) |
| 1,2-Dibromoethane (Ethylene Dibromide) | ug/Kg | 250 | 670 | 250 | – | – | – | ND(50) | – | – | – | – | – | – | – | – | ND(50) | – | – | – | ND(50) | ND(250) | ND(50) | ND(53) | ND(240) | ND(200) | ND(49) | ND(54) |
| 1,2-Dichlorobenzene | ug/Kg | 14000 | 210000 | 210000 | – | – | – | ND(100) | – | – | – | – | – | – | – | – | ND(100) | – | – | – | ND(100) | ND(100) | ND(50) | ND(53) | ND(240) | ND(200) | ND(49) | ND(54) |
| 1,2-Dichloroethane | ug/Kg | 100 | 2100 | 91000 | – | – | – | ND(50) | – | – | – | – | – | – | – | – | ND(50) | – | – | – | ND(50) | ND(50) | ND(50) | ND(53) | ND(240) | ND(200) | ND(49) | ND(54) |
| 1,2-Dichloropropane | ug/Kg | 100 | 4000 | 140000 | – | – | – | ND(50) | – | – | – | – | – | – | – | – | ND(50) | – | – | – | ND(50) | ND(50) | ND(50) | ND(53) | ND(240) | ND(200) | ND(49) | ND(54) |
| 1,3,5-Trimethylbenzene | ug/Kg | 1800 | 94000 | 94000 | – | – | – | ND(100) | – | – | – | – | – | – | – | – | ND(100) | – | – | – | ND(100) | ND(100) | ND(50) | ND(53) | ND(240) | ND(200) | ND(49) | ND(54) |
| 1,3-Dichlorobenzene | ug/Kg | 170 | ID | 170000 | – | – | – | ND(100) | – | – | – | – | – | – | – | – | ND(100) | – | – | – | ND(100) | ND(100) | ND(50) | ND(53) | ND(240) | ND(200) | ND(49) | ND(54) |
| 1,3-Dichloropropane | ug/kg | | | | – | – | – | ND(50) | – | – | – | – | – | – | – | – | ND(50) | – | – | – | ND(50) | ND(50) | – | – | – | – | – | – |
| 1,4-Dichlorobenzene | ug/Kg | 1700 | 19000 | 400000 | – | – | – | ND(100) | – | – | – | – | – | – | – | – | ND(100) | – | – | – | ND(100) | ND(100) | ND(50) | ND(53) | ND(240) | ND(200) | ND(49) | ND(54) |
| 2,2-Dichloropropane | ug/kg | | | | – | – | – | ND(50) | – | – | – | – | – | – | – | – | ND(50) | – | – | – | ND(50) | ND(50) | – | – | – | – | – | – |
| 2-Butanone (Methyl Ethyl Ketone) | ug/Kg | 260000 | 27000000 | 27000000 | – | – | – | ND(750) | – | – | – | – | – | – | – | – | ND(750) | – | – | – | ND(750) | – | ND(250) | ND(260) | ND(1200) | ND(980) | ND(250) | ND(270) |
| 2-Chloroethyl vinyl ether | ug/kg | ID | ID | ID | – | – | – | ND(5000) | – | – | – | – | – | – | – | – | ND(5000) | – | – | – | ND(5000) | – | – | – | – | – | – | – |
| 2-Chlorotoluene | ug/kg | 3300 | 270000 | 500000 | – | – | – | ND(50) | – | – | – | – | – | – | – | – | ND(50) | – | – | – | ND(50) | ND(50) | – | – | – | – | – | – |
| 2-Hexanone | ug/Kg | 20000 | 990000 | 2500000 | – | – | – | ND(2500) | – | – | – | – | – | – | – | – | ND(2500) | – | – | – | ND(2500) | – | ND(250) | ND(260) | ND(1200) | ND(980) | ND(250) | ND(270) |
| 2-Methylnaphthalene | ug/Kg | 57000 | ID | 8100000 | – | – | – | ND(250) | – | – | – | – | – | – | – | – | ND(250) | – | – | – | ND(250) | ND(250) | 340 | ND(260) | ND(1200) | ND(980) | ND(250) | ND(270) |
| 2-Phenylbutane (sec-Butylbenzene) | ug/Kg | 1600 | ID | 2500000 | – | – | – | ND(50) | – | – | – | – | – | – | – | – | ND(50) | – | – | – | ND(50) | ND(50) | ND(50) | 60 | ND(240) | ND(200) | ND(49) | ND(54) |
| 4-Chlorotoluene | ug/kg | | | | – | – | – | ND(50) | – | – | – | – | – | – | – | – | ND(50) | – | – | – | ND(50) | ND(50) | – | – | – | – | – | – |
| 4-Methyl-2-Pentanone (Methyl Isobutyl Ketone) | ug/Kg | 36000 | 2700000 | 2700000 | – | – | – | ND(2500) | – | – | – | – | – | – | – | – | ND(2500) | – | – | – | ND(2500) | – | ND(250) | ND(260) | ND(1200) | ND(980) | ND(250) | ND(270) |
| Acetone | ug/Kg | 15000 | 110000000 | 23000000 | – | – | – | ND(750) | – | – | – | – | – | – | – | – | ND(750) | – | – | – | ND(750) | – | ND(1000) | ND(1100) | ND(4700) | ND(3900) | ND(980) | ND(1100) |
| Acrolein | ug/kg | 2400 | 410 | 3600000 | – | – | – | ND(50) | – | – | – | – | – | – | – | – | ND(50) | – | – | – | ND(50) | – | – | – | – | – | – | – |
| Acrylonitrile | ug/Kg | 52 | 6600 | 16000 | – | – | – | ND(2500) | – | – | – | – | – | – | – | – | ND(2500) | – | – | – | ND(2500) | – | ND(250) | ND(260) | ND(1200) | ND(980) | ND(250) | ND(270) |
| Benzene | ug/Kg | 100 | 1600 | 180000 | – | – | – | ND(50) | – | – | – | – | – | – | – | – | ND(50) | – | – | – | ND(50) | ND(50) | ND(50) | ND(53) | ND(240) | ND(200) | ND(49) | ND(54) |
| Bromobenzene | ug/Kg | 550 | 310000 | 540000 | – | – | – | ND(100) | – | – | – | – | – | – | – | – | ND(100) | – | – | – | ND(100) | ND(100) | ND(50) | ND(53) | ND(240) | ND(200) | ND(49) | ND(54) |
| Bromodichloromethane | ug/Kg | 2000 | 1200 | 110000 | – | – | – | ND(100) | – | – | – | – | – | – | – | – | ND(100) | – | – | – | ND(100) | ND(100) | ND(50) | ND(53) | ND(240) | ND(200) | ND(49) | ND(54) |
| Bromoform | ug/Kg | 2000 | 150000 | 820000 | – | – | – | ND(100) | – | – | – | – | – | – | – | – | ND(100) | – | – | – | ND(100) | ND(100) | ND(50) | ND(53) | ND(240) | ND(200) | ND(49) | ND(54) |
| Bromomethane (Methyl Bromide) | ug/Kg | 200 | 860 | 320000 | – | – | – | ND(250) | – | – | – | – | – | – | – | – | ND(250) | – | – | – | ND(250) | ND(250) | ND(250) | ND(260) | ND(1200) | ND(980) | ND(250) | ND(270) |
| Carbon disulfide | ug/Kg | 16000 | 76000 | 260000 | – | – | – | ND(250) | – | – | – | – | – | – | – | – | ND(250) | – | – | – | ND(250) | – | ND(50) | ND(53) | ND(240) | ND(200) | ND(49) | ND(54) |
| Carbon tetrachloride | ug/Kg | 100 | 190 | 96000 | – | – | – | ND(50) | – | – | – | – | – | – | – | – | ND(50) | – | – | – | ND(50) | ND(50) | ND(50) | ND(53) | ND(240) | ND(200) | ND(49) | ND(54) |
| Chlorobenzene | ug/Kg | 2000 | 120000 | 260000 | – | – | – | ND(50) | – | – | – | – | – | – | – | – | ND(50) | – | – | – | ND(50) | ND(50) | ND(50) | ND(53) | ND(240) | ND(200) | ND(49) | ND(54) |
| Chlorobromomethane | ug/Kg | | | | – | – | – | ND(100) | – | – | – | – | – | – | – | – | ND(100) | – | – | – | ND(100) | ND(100) | ND(50) | ND(53) | ND(240) | ND(200) | ND(49) | ND(54) |
| Chloroethane | ug/Kg | 8600 | 950000 | 950000 | – | – | – | ND(250) | – | – | – | – | – | – | – | – | ND(250) | – | – | – | ND(250) | ND(250) | ND(250) | ND(260) | ND(1200) | ND(980) | ND(250) | ND(270) |
| Chloroform (Trichloromethane) | ug/Kg | 2000 | 7200 | 1200000 | – | – | – | ND(50) | – | – | – | – | – | – | – | – | ND(50) | – | – | – | ND(50) | ND(50) | ND(50) | ND(53) | ND(240) | ND(200) | ND(49) | ND(54) |
| Chloromethane (Methyl Chloride) | ug/Kg | 5200 | 2300 | 1100000 | – | – | – | ND(250) | – | – | – | – | – | – | – | – | ND(250) | – | – | – | ND(250) | ND(250) | ND(250) | ND(260) | ND(1200) | ND(980) | ND(250) | ND(270) |
| cis-1,2-Dichloroethene | ug/Kg | 1400 | 22000 | 640000 | ND(50) | ND(50) | ND(50) | ND(50) | ND(50) | ND(50) | ND(50) | ND(50) | ND(50) | ND(50) | ND(50) | ND(50) | ND(50) | ND(50) | ND(50) | ND(50) | ND(50) | ND(50) | ND(50) | ND(53) | ND(240) | ND(200) | ND(49) | ND(54) |
| Cymene (p-Isopropyltoluene) | ug/Kg | | | | – | – | – | – | – | – | – | – | – | – | – | – | – | – | – | – | – | – | ND(50) | ND(53) | ND(240) | ND(200) | ND(49) | ND(54) |
| Dibromochloromethane | ug/Kg | 2000 | 3900 | 110000 | – | – | – | ND(100) | – | – | – | – | – | – | – | – | ND(100) | – | – | – | ND(100) | ND(100) | ND(50) | ND(53) | ND(240) | ND(200) | ND(49) | ND(54) |
| Dibromomethane | ug/Kg | 1600 | ID | 2000000 | – | – | – | ND(100) | – | – | – | – | – | – | – | – | ND(100) | – | – | – | ND(100) | ND(250) | ND(50) | ND(53) | ND(240) | ND(200) | ND(49) | ND(54) |
| Dichlorodifluoromethane (CFC-12) | ug/Kg | 95000 | 900000 | 1000000 | – | – | – | ND(250) | – | – | – | – | – | – | – | – | ND(250) | – | – | – | ND(250) | ND(50) | ND(250) | ND(260) | ND(1200) | ND(980) | ND(250) | ND(270) |
| Ethyl Ether | ug/Kg | 200 | 7400000 | 7400000 | – | – | – | – | – | – | – | – | – | – | – | – | – | – | – | – | – | – | ND(250) | ND(260) | ND(1200) | ND(980) | ND(250) | ND(270) |
| Ethylbenzene | ug/Kg | 1500 | 87000 | 140000 | – | – | – | ND(50) | – | – | – | – | – | – | – | – | ND(50) | – | – | – | ND(50) | ND(50) | ND(50) | ND(53) | ND(240) | ND(200) | ND(49) | ND(54) |
| Hexachlorobutadiene | ug/kg | 26000 | 130000 | 100000 | – | – | – | ND(50) | – | – | – | – | – | – | – | – | ND(50) | – | – | – | ND(50) | ND(100) | – | – | – | – | – | – |
| Hexachloroethane | ug/Kg | 430 | 40000 | 230000 | – | – | – | – | – | – | – | – | – | – | – | – | – | – | – | – | – | – | ND(50) | ND(53) | ND(240) | ND(200) | ND(49) | ND(54) |
| Iodomethane | ug/Kg | | | | – | – | – | ND(100) | – | – | – | – | – | – | – | – | ND(100) | – | – | – | ND(100) | – | ND(50) | ND(53) | ND(240) | ND(200) | ND(49) | ND(54) |
| Isopropylbenzene | ug/Kg | 91000 | 390000 | 390000 | – | – | – | ND(250) | – | – | – | – | – | – | – | – | ND(250) | – | – | – | ND(250) | ND(250) | ND(250) | ND(260) | ND(1200) | ND(980) | ND(250) | ND(270) |
| Isopropyltoluene | ug/kg | | | | – | – | – | – | – | – | – | – | – | – | – | – | – | – | – | – | – | ND(100) | – | – | – | – | – | – |
| Methyl Tert Butyl Ether | ug/Kg | 800 | 5900000 | 1500000 | – | – | – | ND(250) | – | – | – | – | – | – | – | – | ND(250) | – | – | – | ND(250) | – | ND(50) | ND(53) | ND(240) | ND(200) | ND(49) | ND(54) |
| Methylene chloride | ug/Kg | 100 | 45000 | 1300000 | – | – | – | ND(250) | – | – | – | – | – | – | – | – | ND(250) | – | – | – | ND(250) | ND(250) | ND(250) | ND(260) | ND(1200) | ND(980) | ND(250) | ND(270) |
| Naphthalene | ug/Kg | 35000 | 250000 | 16000000 | – | – | – | ND(250) | – | – | – | – | – | – | – | – | ND(250) | – | – | – | ND(250) | ND(250) | ND(250) | ND(260) | ND(1200) | ND(980) | ND(250) | ND(270) |
| n-Butylbenzene | ug/Kg | 1600 | ID | 2500000 | – | – | – | ND(50) | – | – | – | – | – | – | – | – | ND(50) | – | – | – | ND(50) | ND(50) | ND(50) | ND(53) | ND(240) | ND(200) | ND(49) | ND(54) |
| n-Propylbenzene | ug/Kg | 1600 | ID | 2500000 | – | – | – | ND(100) | – | – | – | – | – | – | – | – | ND(100) | – | – | – | ND(100) | ND(100) | ND(50) | ND(53) | ND(240) | ND(200) | ND(49) | ND(54) |
| Styrene | ug/Kg | 2700 | 250000 | 400000 | – | – | – | ND(50) | – | – | – | – | – | – | – | – | ND(50) | – | – | – | ND(50) | ND(50) | ND(50) | ND(53) | ND(240) | ND(200) | ND(49) | ND(54) |
| tert-Butylbenzene | ug/Kg | 1600 | ID | 2500000 | – | – | – | ND(50) | – | – | – | – | – | – | – | – | ND(50) | – | – | – | ND(50) | ND(50) | ND(50) | ND(53) | ND(240) | ND(200) | ND(49) | ND(54) |
| Tetrachloroethene | ug/Kg | 100 | 11000 | 88000 | 247* | ND(50) | ND(50) | 110* | ND(50) | ND(50) | 117* | ND(50) | ND(50) | ND(50) | ND(50) | ND(50) | ND(50) | ND(50) | ND(50) | ND(50) | 500* | 9230* | 11000* | 8800* | 2800* | 3100* | 21000** | 27000** |
| Tetrahydrofuran | ug/Kg | 1900 | 1300000 | 2900000 | – | – | – | – | – | – | – | – | – | – | – | – | – | – | – | – | – | – | ND(250) | ND(260) | ND(1200) | ND(980) | ND(250) | ND(270) |
| Toluene | ug/Kg | 16000 | 250000 | 250000 | – | – | – | ND(50) | – | – | – | – | – | – | – | – | ND(50) | – | – | – | ND(50) | ND(100) | ND(50) | ND(53) | ND(240) | ND(200) | ND(49) | ND(54) |
| trans-1,2-Dichloroethene | ug/Kg | 2000 | 23000 | 1400000 | ND(50) | ND(50) | ND(50) | ND(50) | ND(50) | ND(50) | ND(50) | ND(50) | ND(50) | ND(50) | ND(50) | ND(50) | ND(50) | ND(50) | ND(50) | ND(50) | ND(50) | ND(50) | ND(50) | ND(53) | ND(240) | ND(200) | ND(49) | ND(54) |
| trans-1,4-Dichloro-2-butene | ug/Kg | | | | – | – | – | – | – | – | – | – | – | – | – | – | – | – | – | – | – | – | ND(50) | ND(53) | ND(240) | ND(200) | ND(49) | ND(54) |
| Trichloroethene | ug/Kg | 100 | 7100 | 500000 | ND(50) | ND(50) | ND(50) | ND(50) | ND(50) | ND(50) | ND(50) | ND(50) | ND(50) | ND(50) | ND(50) | ND(50) | ND(50) | ND(50) | ND(50) | ND(50) | ND(50) | ND(50) | ND(50) | ND(53) | ND(240) | ND(200) | ND(49) | ND(54) |
| Trichlorofluoromethane (CFC-11) | ug/Kg | 52000 | 560000 | 560000 | – | – | – | ND(100) | – | – | – | – | – | – | – | – | ND(100) | – | – | – | ND(100) | ND(100) | ND(50) | ND(53) | ND(240) | ND(200) | ND(49) | ND(54) |
| Vinyl acetate | ug/kg | 13000 | 790000 | 2400000 | – | – | – | ND(2500) | – | – | – | – | – | – | – | – | ND(2500) | – | – | – | ND(2500) | – | – | – | – | – | – | – |
| Vinyl chloride | ug/Kg | 40 | 270 | 3800 | ND(50) | ND(50) | ND(50) | ND(100) | ND(50) | ND(50) | ND(50) | ND(50) | ND(50) | ND(50) | ND(50) | ND(50) | ND(100) | ND(50) | ND(50) | ND(50) | ND(100) | ND(100) | ND(50) | ND(53) | ND(240) | ND(200) | ND(49) | ND(54) |
| Xylene (total) | ug/Kg | 5600 | 150000 | 150000 | – | – | – | ND(150) | – | – | – | – | – | – | – | – | ND(150) | – | – | – | ND(150) | ND(150) | ND(100) | ND(110) | ND(470) | ND(390) | ND(49) | ND(110) |
| trans-1,3-Dichloropropene | ug/Kg | | | | – | – | – | ND(50) | – | – | – | – | – | – | – | – | ND(50) | – | – | – | ND(50) | ND(50) | ND(50) | ND(53) | ND(240) | ND(200) | ND(49) | ND(54) |
| cis-1,3-Dichloropropene | ug/Kg | | | | – | – | – | ND(50) | – | – | – | – | – | – | – | – | ND(50) | – | – | – | ND(50) | ND(50) | ND(50) | ND(53) | ND(240) | ND(200) | ND(49) | ND(54) |
| 1,3-Dichloropropene (total) | ug/Kg | 170 | 1000 | 10000 | – | – | – | ND(50) | – | – | – | – | – | – | – | – | ND(50) | – | – | – | ND(50) | ND(50) | ND(50) | ND(53) | ND(240) | ND(200) | ND(49) | ND(54) |

Notes: Boxed Value - Indicates exceedence of applicable Part 201 criteria
Dashed Line - No applicable criteria or not analyzed
ID - Inadequate data to develop criteria

TABLE 1
SOIL ANALYTICAL SUMMARY, HISTORICAL VOC DATA
BROADWAY VILLAGE AT LOWER TOWN
ANN ARBOR, MICHIGAN

| Sample Location | | Michigan Act 451, Part 201 Residential and Commercial I | | | GP-4 | GP-4 | GP-7(a) | GP-7(b) | GP-11 | GP-11 | GP-13 | GP-13 | GP-15 | GP-15 | GP-16 | GP-16 | GP-17 | GP-17 | GP-18 | GP-18 | GP-19 | GP-19 | GP-20 | GP-20 | TW-3 | TW-3 | VAS-1 | VAS-1 |
|---|---|---|---|---|---|---|---|---|---|---|---|---|---|---|---|---|---|---|---|---|---|---|---|---|---|---|---|---|
| Sample Identification | | Residential Drinking Water Protection | Soil Volatilization to Indoor Air Inhalation | Direct Contact Criteria | GP-4 | GP-4 | GP-7(a) | GP-7(b) | GP-11 | GP-11 | GP-13 | GP-13 | GP-15 | GP-15 | GP-16 | GP-16 | GP-17 | GP-17 | GP-18 | GP-18 | GP-19 | GP-19 | GP-20 | GP-20 | TW-3 | TW-3 | VAS-1 | VAS-1 |
| Sample Date | | | | | 7/15/2002 | 7/15/2002 | 7/17/2002 | 7/17/2002 | 7/18/2002 | 7/18/2002 | 7/18/2002 | 7/18/2002 | 7/19/2002 | 7/19/2002 | 7/19/2002 | 7/19/2002 | 7/19/2002 | 7/19/2002 | 7/22/2002 | 7/22/2002 | 7/22/2002 | 7/22/2002 | 7/23/2002 | 7/23/2002 | 7/9/2002 | 7/9/2002 | 7/10/2002 | 7/10/2002 |
| Sample Depth (ft bgs) | | | | | (12-13) | (8-9) | (5-10) | (5-10) | (11-12) | (9-10) | (11-12) | (9-10) | (12-13) | (9-10) | (10-15) | (9-10) | (10-11) | (9-10) | (11-12) | (12-13) | (10-11) | (9-10) | (8-9) | (9-10) | (11-12) | (13-14) | (10-11) | (11-12) |
| Sample Type | | a | b | c | | | | | | | | | | | | | | | | | | | | | | | | |
| | Units | | | | | | | | | | | | | | | | | | | | | | | | | | | |
| *VOCs* | | | | | | | | | | | | | | | | | | | | | | | | | | | | |
| 1,1,1,2-Tetrachloroethane | ug/Kg | 1500 | 6200 | 440000 | ND(200) | ND(57) | ND(53) | ND(51) | ND(55) | ND(72) | ND(88) | ND(52) | ND(57) | ND(60) | ND(57) | ND(54) | ND(54) | ND(52) | ND(57) | ND(61) | ND(60) | ND(54) | ND(53) | ND(52) | ND(66) | ND(62) | ND(52) | ND(54) |
| 1,1,1-Trichloroethane | ug/Kg | 4000 | 250000 | 460000 | ND(200) | ND(57) | ND(53) | ND(51) | ND(55) | ND(72) | ND(88) | ND(52) | ND(57) | ND(60) | ND(57) | ND(54) | ND(54) | ND(52) | ND(57) | ND(61) | ND(60) | ND(54) | ND(53) | ND(52) | ND(66) | ND(62) | ND(52) | ND(54) |
| 1,1,2,2-Tetrachloroethane | ug/Kg | 170 | 4300 | 53000 | ND(200) | ND(57) | ND(53) | ND(51) | ND(55) | ND(72) | ND(88) | ND(52) | ND(57) | ND(60) | ND(57) | ND(54) | ND(54) | ND(52) | ND(57) | ND(61) | ND(60) | ND(54) | ND(53) | ND(52) | ND(66) | ND(62) | ND(52) | ND(54) |
| 1,1,2-Trichloroethane | ug/Kg | 100 | 4600 | 180000 | ND(200) | ND(57) | ND(53) | ND(51) | ND(55) | ND(72) | ND(88) | ND(52) | ND(57) | ND(60) | ND(57) | ND(54) | ND(54) | ND(52) | ND(57) | ND(61) | ND(60) | ND(54) | ND(53) | ND(52) | ND(66) | ND(62) | ND(52) | ND(54) |
| 1,1-Dichloroethane | ug/kg | 18000 | 230000 | 890000 | – | – | – | – | – | – | – | – | – | – | – | – | – | – | – | – | – | – | – | – | – | – | – | – |
| 1,1-Dichloroethene | ug/Kg | 140 | 62 | 200000 | ND(200) | ND(57) | ND(53) | ND(51) | ND(55) | ND(72) | ND(88) | ND(52) | ND(57) | ND(60) | ND(57) | ND(54) | ND(54) | ND(52) | ND(57) | ND(61) | ND(60) | ND(54) | ND(53) | ND(52) | ND(66) | ND(62) | ND(52) | ND(54) |
| 1,1-Dichloropropene | ug/kg | | | | – | – | – | – | – | – | – | – | – | – | – | – | – | – | – | – | – | – | – | – | – | – | – | – |
| 1,2,3-Trichlorobenzene | ug/Kg | | | | ND(1000) | ND(290) | ND(270) | ND(260) | ND(280) | ND(360) | ND(440) | ND(260) | ND(280) | ND(300) | ND(280) | ND(270) | ND(270) | ND(260) | ND(280) | ND(310) | ND(300) | ND(270) | ND(260) | ND(260) | ND(330) | ND(310) | ND(260) | ND(270) |
| 1,2,3-Trichloropropane | ug/Kg | 840 | ID | 830000 | ND(200) | ND(57) | ND(53) | ND(51) | ND(55) | ND(72) | ND(88) | ND(52) | ND(57) | ND(60) | ND(57) | ND(54) | ND(54) | ND(52) | ND(57) | ND(61) | ND(60) | ND(54) | ND(53) | ND(52) | ND(66) | ND(62) | ND(52) | ND(54) |
| 1,2,4-Trichlorobenzene | ug/Kg | 4200 | 1100000 | 990000 | ND(1000) | ND(290) | ND(270) | ND(260) | ND(280) | ND(360) | ND(440) | ND(260) | ND(280) | ND(300) | ND(280) | ND(270) | ND(270) | ND(260) | ND(280) | ND(310) | ND(300) | ND(270) | ND(260) | ND(260) | ND(330) | ND(310) | ND(260) | ND(270) |
| 1,2,4-Trimethylbenzene | ug/Kg | 2100 | 110000 | 110000 | ND(200) | ND(57) | ND(53) | ND(51) | ND(55) | ND(72) | ND(88) | ND(52) | ND(57) | ND(60) | ND(57) | ND(54) | ND(54) | ND(52) | ND(57) | ND(61) | ND(60) | ND(54) | ND(53) | ND(52) | ND(66) | ND(62) | ND(52) | ND(54) |
| 1,2-Dibromo-3-chloropropane (DBCP) | ug/Kg | 4 | 1200 | 1200 | ND(1000) | ND(290) | ND(270) | ND(260) | ND(280) | ND(360) | ND(440) | ND(260) | ND(280) | ND(300) | ND(280) | ND(270) | ND(270) | ND(260) | ND(280) | ND(310) | ND(300) | ND(270) | ND(260) | ND(260) | ND(330) | ND(310) | ND(260) | ND(270) |
| 1,2-Dibromoethane (Ethylene Dibromide) | ug/Kg | 250 | 670 | 250 | ND(200) | ND(57) | ND(53) | ND(51) | ND(55) | ND(72) | ND(88) | ND(52) | ND(57) | ND(60) | ND(57) | ND(54) | ND(54) | ND(52) | ND(57) | ND(61) | ND(60) | ND(54) | ND(53) | ND(52) | ND(66) | ND(62) | ND(52) | ND(54) |
| 1,2-Dichlorobenzene | ug/Kg | 14000 | 210000 | 210000 | ND(200) | ND(57) | ND(53) | ND(51) | ND(55) | ND(72) | ND(88) | ND(52) | ND(57) | ND(60) | ND(57) | ND(54) | ND(54) | ND(52) | ND(57) | ND(61) | ND(60) | ND(54) | ND(53) | ND(52) | ND(66) | ND(62) | ND(52) | ND(54) |
| 1,2-Dichloroethane | ug/Kg | 100 | 2100 | 91000 | ND(200) | ND(57) | ND(53) | ND(51) | ND(55) | ND(72) | ND(88) | ND(52) | ND(57) | ND(60) | ND(57) | ND(54) | ND(54) | ND(52) | ND(57) | ND(61) | ND(60) | ND(54) | ND(53) | ND(52) | ND(66) | ND(62) | ND(52) | ND(54) |
| 1,2-Dichloropropane | ug/Kg | 100 | 4000 | 140000 | ND(200) | ND(57) | ND(53) | ND(51) | ND(55) | ND(72) | ND(88) | ND(52) | ND(57) | ND(60) | ND(57) | ND(54) | ND(54) | ND(52) | ND(57) | ND(61) | ND(60) | ND(54) | ND(53) | ND(52) | ND(66) | ND(62) | ND(52) | ND(54) |
| 1,3,5-Trimethylbenzene | ug/Kg | 1800 | 94000 | 94000 | ND(200) | ND(57) | ND(53) | ND(51) | ND(55) | ND(72) | ND(88) | ND(52) | ND(57) | ND(60) | ND(57) | ND(54) | ND(54) | ND(52) | ND(57) | ND(61) | ND(60) | ND(54) | ND(53) | ND(52) | ND(66) | ND(62) | ND(52) | ND(54) |
| 1,3-Dichlorobenzene | ug/Kg | 170 | ID | 170000 | ND(200) | ND(57) | ND(53) | ND(51) | ND(55) | ND(72) | ND(88) | ND(52) | ND(57) | ND(60) | ND(57) | ND(54) | ND(54) | ND(52) | ND(57) | ND(61) | ND(60) | ND(54) | ND(53) | ND(52) | ND(66) | ND(62) | ND(52) | ND(54) |
| 1,3-Dichloropropane | ug/kg | | | | – | – | – | – | – | – | – | – | – | – | – | – | – | – | – | – | – | – | – | – | – | – | – | – |
| 1,4-Dichlorobenzene | ug/Kg | 1700 | 19000 | 400000 | ND(200) | ND(57) | ND(53) | ND(51) | ND(55) | ND(72) | ND(88) | ND(52) | ND(57) | ND(60) | ND(57) | ND(54) | ND(54) | ND(52) | ND(57) | ND(61) | ND(60) | ND(54) | ND(53) | ND(52) | ND(66) | ND(62) | ND(52) | ND(54) |
| 2,2-Dichloropropane | ug/kg | | | | – | – | – | – | – | – | – | – | – | – | – | – | – | – | – | – | – | – | – | – | – | – | – | – |
| 2-Butanone (Methyl Ethyl Ketone) | ug/Kg | 260000 | 27000000 | 27000000 | ND(1000) | ND(290) | ND(270) | ND(260) | ND(280) | ND(360) | ND(440) | ND(260) | ND(280) | ND(300) | ND(280) | ND(270) | ND(270) | ND(260) | ND(280) | ND(310) | ND(300) | ND(270) | ND(260) | ND(260) | ND(66) | ND(310) | ND(260) | ND(270) |
| 2-Chloroethyl vinyl ether | ug/kg | ID | ID | ID | – | – | – | – | – | – | – | – | – | – | – | – | – | – | – | – | – | – | – | – | – | – | – | – |
| 2-Chlorotoluene | ug/kg | 3300 | 270000 | 500000 | – | – | – | – | – | – | – | – | – | – | – | – | – | – | – | – | – | – | – | – | – | – | – | – |
| 2-Hexanone | ug/Kg | 20000 | 990000 | 2500000 | ND(1000) | ND(290) | ND(270) | ND(260) | ND(280) | ND(360) | ND(440) | ND(260) | ND(280) | ND(300) | ND(280) | ND(270) | ND(270) | ND(260) | ND(280) | ND(310) | ND(300) | ND(270) | ND(260) | ND(260) | ND(330) | ND(310) | ND(260) | ND(270) |
| 2-Methylnaphthalene | ug/Kg | 57000 | ID | 8100000 | ND(1000) | ND(290) | ND(270) | ND(260) | ND(280) | ND(360) | ND(440) | ND(260) | ND(280) | ND(300) | ND(280) | ND(270) | ND(270) | ND(260) | ND(280) | ND(310) | ND(300) | ND(270) | ND(260) | ND(260) | ND(330) | ND(310) | ND(260) | ND(270) |
| 2-Phenylbutane (sec-Butylbenzene) | ug/Kg | 1600 | ID | 2500000 | ND(200) | ND(57) | ND(53) | ND(51) | ND(55) | ND(72) | ND(88) | ND(52) | ND(57) | ND(60) | ND(57) | ND(54) | ND(54) | ND(52) | ND(57) | ND(61) | ND(60) | ND(54) | ND(53) | ND(52) | ND(66) | ND(62) | ND(52) | ND(54) |
| 4-Chlorotoluene | ug/kg | | | | – | – | – | – | – | – | – | – | – | – | – | – | – | – | – | – | – | – | – | – | – | – | – | – |
| 4-Methyl-2-Pentanone (Methyl Isobutyl Ketone) | ug/Kg | 36000 | 2700000 | 2700000 | ND(1000) | ND(290) | ND(270) | ND(260) | ND(280) | ND(360) | ND(440) | ND(260) | ND(280) | ND(300) | ND(280) | ND(270) | ND(270) | ND(260) | ND(280) | ND(310) | ND(300) | ND(270) | ND(260) | ND(260) | ND(330) | ND(310) | ND(260) | ND(270) |
| Acetone | ug/Kg | 15000 | 110000000 | 23000000 | ND(4000) | ND(1100) | ND(1100) | ND(1000) | ND(1100) | ND(1400) | ND(1800) | ND(1000) | ND(1100) | ND(1200) | ND(1100) | ND(1100) | ND(1100) | ND(1000) | ND(1100) | ND(1200) | ND(1200) | ND(1100) | ND(1100) | ND(1000) | ND(130) | ND(1200) | ND(1000) | ND(1800) |
| Acrolein | ug/kg | 2400 | 410 | 3600000 | – | – | – | – | – | – | – | – | – | – | – | – | – | – | – | – | – | – | – | – | – | – | – | – |
| Acrylonitrile | ug/Kg | 52 | 6600 | 16000 | ND(1000) | ND(290) | ND(270) | ND(260) | ND(280) | ND(360) | ND(440) | ND(260) | ND(280) | ND(300) | ND(280) | ND(270) | ND(270) | ND(260) | ND(280) | ND(310) | ND(300) | ND(270) | ND(260) | ND(260) | ND(330) | ND(310) | ND(260) | ND(270) |
| Benzene | ug/Kg | 100 | 1600 | 180000 | ND(200) | ND(57) | ND(53) | ND(51) | ND(55) | ND(72) | ND(88) | ND(52) | ND(57) | ND(60) | ND(57) | ND(54) | ND(54) | ND(52) | ND(57) | ND(61) | ND(60) | ND(54) | ND(53) | ND(52) | ND(66) | ND(62) | ND(52) | ND(54) |
| Bromobenzene | ug/Kg | 550 | 310000 | 540000 | ND(200) | ND(57) | ND(53) | ND(51) | ND(55) | ND(72) | ND(88) | ND(52) | ND(57) | ND(60) | ND(57) | ND(54) | ND(54) | ND(52) | ND(57) | ND(61) | ND(60) | ND(54) | ND(53) | ND(52) | ND(66) | ND(62) | ND(52) | ND(54) |
| Bromodichloromethane | ug/Kg | 2000 | 1200 | 110000 | ND(200) | ND(57) | ND(53) | ND(51) | ND(55) | ND(72) | ND(88) | ND(52) | ND(57) | ND(60) | ND(57) | ND(54) | ND(54) | ND(52) | ND(57) | ND(61) | ND(60) | ND(54) | ND(53) | ND(52) | ND(66) | ND(62) | ND(52) | ND(54) |
| Bromoform | ug/Kg | 2000 | 150000 | 820000 | ND(200) | ND(57) | ND(53) | ND(51) | ND(55) | ND(72) | ND(88) | ND(52) | ND(57) | ND(60) | ND(57) | ND(54) | ND(54) | ND(52) | ND(57) | ND(61) | ND(60) | ND(54) | ND(53) | ND(52) | ND(66) | ND(62) | ND(52) | ND(54) |
| Bromomethane (Methyl Bromide) | ug/Kg | 200 | 860 | 320000 | ND(1000) | ND(290) | ND(270) | ND(260) | ND(280) | ND(360) | ND(440) | ND(260) | ND(280) | ND(300) | ND(280) | ND(270) | ND(270) | ND(260) | ND(280) | ND(310) | ND(300) | ND(270) | ND(260) | ND(260) | ND(330) | ND(310) | ND(260) | ND(270) |
| Carbon disulfide | ug/Kg | 16000 | 76000 | 280000 | ND(200) | ND(57) | ND(53) | ND(51) | ND(55) | ND(72) | ND(88) | ND(52) | ND(57) | ND(60) | ND(57) | ND(54) | ND(54) | ND(52) | ND(57) | ND(61) | ND(60) | ND(54) | ND(53) | ND(52) | ND(66) | ND(62) | ND(52) | ND(54) |
| Carbon tetrachloride | ug/Kg | 100 | 190 | 96000 | ND(200) | ND(57) | ND(53) | ND(51) | ND(55) | ND(72) | ND(88) | ND(52) | ND(57) | ND(60) | ND(57) | ND(54) | ND(54) | ND(52) | ND(57) | ND(61) | ND(60) | ND(54) | ND(53) | ND(52) | ND(66) | ND(62) | ND(52) | ND(54) |
| Chlorobenzene | ug/Kg | 2000 | 120000 | 260000 | ND(200) | ND(57) | ND(53) | ND(51) | ND(55) | ND(72) | ND(88) | ND(52) | ND(57) | ND(60) | ND(57) | ND(54) | ND(54) | ND(52) | ND(57) | ND(61) | ND(60) | ND(54) | ND(53) | ND(52) | ND(66) | ND(62) | ND(52) | ND(54) |
| Chlorobromomethane | ug/Kg | | | | ND(200) | ND(57) | ND(53) | ND(51) | ND(55) | ND(72) | ND(88) | ND(52) | ND(57) | ND(60) | ND(57) | ND(54) | ND(54) | ND(52) | ND(57) | ND(61) | ND(60) | ND(54) | ND(53) | ND(52) | ND(66) | ND(62) | ND(52) | ND(54) |
| Chloroethane | ug/Kg | 8600 | 950000 | 950000 | ND(1000) | ND(290) | ND(270) | ND(260) | ND(280) | ND(360) | ND(440) | ND(260) | ND(280) | ND(300) | ND(280) | ND(270) | ND(270) | ND(260) | ND(280) | ND(310) | ND(300) | ND(270) | ND(260) | ND(260) | ND(330) | ND(310) | ND(260) | ND(270) |
| Chloroform (Trichloromethane) | ug/Kg | 2000 | 7200 | 1200000 | ND(200) | ND(57) | ND(53) | ND(51) | ND(55) | ND(72) | ND(88) | ND(52) | ND(57) | ND(60) | ND(57) | ND(54) | ND(54) | ND(52) | ND(57) | ND(61) | ND(60) | ND(54) | ND(53) | ND(52) | ND(66) | ND(62) | ND(52) | ND(54) |
| Chloromethane (Methyl Chloride) | ug/Kg | 5200 | 2300 | 1100000 | ND(1000) | ND(290) | ND(270) | ND(260) | ND(280) | ND(360) | ND(440) | ND(260) | ND(280) | ND(300) | ND(280) | ND(270) | ND(270) | ND(260) | ND(280) | ND(310) | ND(300) | ND(270) | ND(260) | ND(260) | ND(330) | ND(310) | ND(260) | ND(270) |
| cis-1,2-Dichloroethene | ug/Kg | 1400 | 22000 | 640000 | ND(200) | ND(57) | ND(270) | ND(51) | ND(55) | ND(72) | ND(88) | ND(52) | ND(57) | ND(60) | ND(57) | ND(54) | ND(54) | ND(52) | ND(57) | ND(61) | ND(60) | ND(54) | ND(53) | ND(52) | ND(330) | ND(62) | ND(52) | ND(54) |
| Cymene (p-Isopropyltoluene) | ug/Kg | | | | ND(200) | ND(57) | ND(53) | ND(51) | ND(55) | ND(72) | ND(88) | ND(52) | ND(57) | ND(60) | ND(57) | ND(54) | ND(54) | ND(52) | ND(57) | ND(61) | ND(60) | ND(54) | ND(53) | ND(52) | ND(66) | ND(62) | ND(52) | ND(54) |
| Dibromochloromethane | ug/Kg | 2000 | 3900 | 110000 | ND(200) | ND(57) | ND(53) | ND(51) | ND(55) | ND(72) | ND(88) | ND(52) | ND(57) | ND(60) | ND(57) | ND(54) | ND(54) | ND(52) | ND(57) | ND(61) | ND(60) | ND(54) | ND(53) | ND(52) | ND(66) | ND(62) | ND(52) | ND(54) |
| Dibromomethane | ug/Kg | 1600 | ID | 2000000 | ND(200) | ND(57) | ND(53) | ND(51) | ND(55) | ND(72) | ND(88) | ND(52) | ND(57) | ND(60) | ND(57) | ND(54) | ND(54) | ND(52) | ND(57) | ND(61) | ND(60) | ND(54) | ND(53) | ND(52) | ND(66) | ND(62) | ND(52) | ND(54) |
| Dichlorodifluoromethane (CFC-12) | ug/Kg | 95000 | 900000 | 1000000 | ND(1000) | ND(290) | ND(270) | ND(260) | ND(280) | ND(360) | ND(440) | ND(260) | ND(280) | ND(300) | ND(280) | ND(270) | ND(270) | ND(260) | ND(280) | ND(310) | ND(300) | ND(270) | ND(260) | ND(260) | ND(330) | ND(310) | ND(260) | ND(270) |
| Ethyl Ether | ug/Kg | 200 | 7400000 | 7400000 | ND(1000) | ND(290) | ND(270) | ND(260) | ND(280) | ND(360) | ND(440) | ND(260) | ND(280) | ND(300) | ND(280) | ND(270) | ND(270) | ND(260) | ND(280) | ND(310) | ND(300) | ND(270) | ND(260) | ND(260) | ND(330) | ND(310) | ND(260) | ND(270) |
| Ethylbenzene | ug/Kg | 1500 | 87000 | 140000 | ND(20) | ND(57) | ND(53) | ND(51) | ND(55) | ND(72) | ND(88) | ND(52) | ND(57) | ND(60) | ND(57) | ND(54) | ND(54) | ND(52) | ND(57) | ND(61) | ND(60) | ND(54) | ND(53) | ND(52) | ND(66) | ND(62) | ND(52) | ND(54) |
| Hexachlorobutadiene | ug/kg | 26000 | 130000 | 100000 | – | – | – | – | – | – | – | – | – | – | – | – | – | – | – | – | – | – | – | – | – | – | – | – |
| Hexachloroethane | ug/Kg | 430 | 40000 | 230000 | ND(200) | ND(57) | ND(53) | ND(51) | ND(55) | ND(72) | ND(88) | ND(52) | ND(57) | ND(60) | ND(57) | ND(54) | ND(54) | ND(52) | ND(57) | ND(61) | ND(60) | ND(54) | ND(53) | ND(52) | ND(66) | ND(62) | ND(52) | ND(54) |
| Iodomethane | ug/Kg | | | | ND(200) | ND(57) | ND(53) | ND(51) | ND(55) | ND(72) | ND(88) | ND(52) | ND(57) | ND(60) | ND(57) | ND(54) | ND(54) | ND(52) | ND(57) | ND(61) | ND(60) | ND(54) | ND(53) | ND(52) | ND(66) | ND(62) | ND(52) | ND(54) |
| Isopropylbenzene | ug/Kg | 91000 | 390000 | 390000 | ND(1000) | ND(290) | ND(270) | ND(260) | ND(280) | ND(360) | ND(440) | ND(260) | ND(280) | ND(300) | ND(280) | ND(270) | ND(270) | ND(260) | ND(280) | ND(310) | ND(300) | ND(270) | ND(260) | ND(260) | ND(330) | ND(310) | ND(260) | ND(270) |
| Isopropyltoluene | ug/kg | | | | – | – | – | – | – | – | – | – | – | – | – | – | – | – | – | – | – | – | – | – | – | – | – | – |
| Methyl Tert Butyl Ether | ug/Kg | 800 | 5900000 | 1500000 | ND(200) | ND(57) | ND(53) | ND(51) | ND(55) | ND(72) | ND(88) | ND(52) | ND(57) | ND(60) | ND(57) | ND(54) | ND(54) | ND(52) | ND(57) | ND(61) | ND(60) | ND(54) | ND(53) | ND(52) | ND(66) | ND(62) | ND(52) | ND(54) |
| Methylene chloride | ug/Kg | 100 | 45000 | 1300000 | ND(1000) | ND(290) | ND(270) | ND(260) | ND(280) | ND(360) | ND(440) | ND(260) | ND(280) | ND(300) | ND(280) | ND(270) | ND(270) | ND(260) | ND(280) | ND(310) | ND(300) | ND(270) | ND(260) | ND(260) | ND(330) | ND(310) | ND(260) | ND(270) |
| Naphthalene | ug/Kg | 35000 | 250000 | 16000000 | ND(1000) | ND(290) | ND(270) | ND(260) | ND(280) | ND(360) | ND(440) | ND(260) | ND(280) | ND(300) | ND(280) | ND(270) | ND(270) | ND(260) | ND(280) | ND(310) | ND(300) | ND(270) | ND(260) | ND(260) | ND(330) | ND(310) | ND(260) | ND(270) |
| n-Butylbenzene | ug/Kg | 1600 | ID | 2500000 | ND(200) | ND(57) | ND(53) | ND(51) | ND(55) | ND(72) | ND(88) | ND(52) | ND(57) | ND(60) | ND(57) | ND(54) | ND(54) | ND(52) | ND(57) | ND(61) | ND(60) | ND(54) | ND(53) | ND(52) | ND(66) | ND(62) | ND(52) | ND(54) |
| n-Propylbenzene | ug/Kg | 1600 | ID | 2500000 | ND(200) | ND(57) | ND(53) | ND(51) | ND(55) | ND(72) | ND(88) | ND(52) | ND(57) | ND(60) | ND(57) | ND(54) | ND(54) | ND(52) | ND(57) | ND(61) | ND(60) | ND(54) | ND(53) | ND(52) | ND(66) | ND(62) | ND(52) | ND(54) |
| Styrene | ug/Kg | 2700 | 250000 | 400000 | ND(200) | ND(57) | ND(53) | ND(51) | ND(55) | ND(72) | ND(88) | ND(52) | ND(57) | ND(60) | ND(57) | ND(54) | ND(54) | ND(52) | ND(57) | ND(61) | ND(60) | ND(54) | ND(53) | ND(52) | ND(66) | ND(62) | ND(52) | ND(54) |
| tert-Butylbenzene | ug/Kg | 1600 | ID | 2500000 | ND(200) | ND(57) | ND(53) | ND(51) | ND(55) | ND(72) | ND(88) | ND(52) | ND(57) | ND(60) | ND(57) | ND(54) | ND(54) | ND(52) | ND(57) | ND(61) | ND(60) | ND(54) | ND(53) | ND(52) | ND(66) | ND(62) | ND(52) | ND(54) |
| Tetrachloroethene | ug/Kg | 100 | 11000 | 88000 | 8700* | 2900* | 120* | 160* | 5600* | 1700* | 5800* | 3200* | 750* | 1400* | 3600* | 1000* | 2300* | 2000* | ND(57) | ND(61) | 1100* | 2600* | 2500* | 2600* | ND(66) | ND(62) | 4100* | 2100* |
| Tetrahydrofuran | ug/Kg | 1900 | 1300000 | 2900000 | ND(1000) | ND(290) | ND(270) | ND(260) | ND(280) | ND(360) | ND(440) | ND(260) | ND(280) | ND(300) | ND(280) | ND(270) | ND(270) | ND(260) | ND(280) | ND(310) | ND(300) | ND(270) | ND(260) | ND(260) | ND(330) | ND(310) | ND(260) | ND(270) |
| Toluene | ug/Kg | 16000 | 250000 | 250000 | ND(200) | ND(57) | ND(53) | ND(51) | ND(55) | ND(72) | 210 | ND(52) | ND(57) | ND(60) | ND(57) | ND(54) | ND(54) | ND(52) | ND(57) | ND(61) | ND(60) | ND(54) | ND(53) | ND(52) | ND(66) | ND(62) | ND(52) | ND(54) |
| trans-1,2-Dichloroethene | ug/Kg | 2000 | 23000 | 1400000 | ND(200) | ND(57) | ND(53) | ND(51) | ND(55) | ND(72) | ND(88) | ND(52) | ND(57) | ND(60) | ND(57) | ND(54) | ND(54) | ND(52) | ND(57) | ND(61) | ND(60) | ND(54) | ND(53) | ND(52) | ND(66) | ND(62) | ND(52) | ND(54) |
| trans-1,4-Dichloro-2-butene | ug/Kg | | | | ND(200) | ND(57) | ND(53) | ND(51) | ND(55) | ND(72) | ND(88) | ND(52) | ND(57) | ND(60) | ND(57) | ND(54) | ND(54) | ND(52) | ND(57) | ND(61) | ND(60) | ND(54) | ND(53) | ND(52) | ND(66) | ND(62) | ND(52) | ND(54) |
| Trichloroethene | ug/Kg | 100 | 7100 | 500000 | ND(200) | ND(57) | ND(53) | ND(51) | ND(55) | ND(72) | ND(88) | ND(52) | ND(57) | ND(60) | ND(57) | ND(54) | ND(54) | ND(52) | ND(57) | ND(61) | ND(60) | ND(54) | ND(53) | ND(52) | ND(66) | ND(62) | ND(52) | ND(54) |
| Trichlorofluoromethane (CFC-11) | ug/Kg | 52000 | 560000 | 560000 | ND(200) | ND(57) | ND(53) | ND(51) | ND(55) | ND(72) | ND(88) | ND(52) | ND(57) | ND(60) | ND(57) | ND(54) | ND(54) | ND(52) | ND(57) | ND(61) | ND(60) | ND(54) | ND(53) | ND(52) | ND(66) | ND(62) | ND(52) | ND(54) |
| Vinyl acetate | ug/kg | 13000 | 790000 | 2400000 | – | – | – | – | – | – | – | – | – | – | – | – | – | – | – | – | – | – | – | – | – | – | – | – |
| Vinyl chloride | ug/Kg | 40 | 270 | 3800 | ND(200) | ND(57) | ND(53) | ND(51) | ND(55) | ND(72) | ND(88) | ND(52) | ND(57) | ND(60) | ND(57) | ND(54) | ND(54) | ND(52) | ND(57) | ND(61) | ND(60) | ND(54) | ND(53) | ND(52) | ND(66) | ND(62) | ND(52) | ND(54) |
| Xylene (total) | ug/Kg | 5600 | 150000 | 150000 | ND(400) | ND(110) | ND(110) | ND(100) | ND(110) | ND(140) | ND(180) | ND(100) | ND(110) | ND(120) | ND(110) | ND(110) | ND(110) | ND(100) | ND(110) | ND(120) | ND(120) | ND(110) | ND(110) | ND(100) | ND(130) | ND(120) | ND(100) | ND(110) |
| trans-1,3-Dichloropropene | ug/Kg | | | | ND(200) | ND(57) | ND(53) | ND(51) | ND(55) | ND(72) | ND(88) | ND(52) | ND(57) | ND(60) | ND(57) | ND(54) | ND(54) | ND(52) | ND(57) | ND(61) | ND(60) | ND(54) | ND(53) | ND(52) | ND(66) | ND(62) | ND(52) | ND(54) |
| cis-1,3-Dichloropropene | ug/Kg | | | | ND(200) | ND(57) | ND(53) | ND(51) | ND(55) | ND(72) | ND(88) | ND(52) | ND(57) | ND(60) | ND(57) | ND(54) | ND(54) | ND(52) | ND(57) | ND(61) | ND(60) | ND(54) | ND(53) | ND(52) | ND(66) | ND(62) | ND(52) | ND(54) |
| 1,3-Dichloropropene (total) | ug/Kg | 170 | 1000 | 10000 | ND(200) | ND(57) | ND(53) | ND(51) | ND(55) | ND(72) | ND(88) | ND(52) | ND(57) | ND(60) | ND(57) | ND(54) | ND(54) | ND(52) | ND(57) | ND(61) | ND(60) | ND(54) | ND(53) | ND(52) | ND(66) | ND(62) | ND(52) | ND(54) |

Notes: Boxed Value - Indicates exceedence of applicable Part 201 criteria
Dashed Line - No applicable criteria or not analyzed
ID - Inadequate data to develop criteria

TABLE 2
GROUNDWATER ANALYTICAL SUMMARY, HISTORICAL VOC DATA
BROADWAY VILLAGE AT LOWER TOWN
ANN ARBOR, MICHIGAN

| Sample Location | | Michigan Act 451, Part 201 Groundwater Residential and Industrial-Commercial Generic Cleanup Criteria (1) | | | AHI-SB-14 | GP-1 | GP-2 | GP-3 | GP-3 | GP-4 | GP-4 | GP-7 | GP-11 | GP-13 | GP-15 | GP-16 | GP-17 | GP-18 | GP-19 | GP-19 | GP-20 | GP-20 | TW-3 | VAS-1 | VAS-1 |
|---|---|---|---|---|---|---|---|---|---|---|---|---|---|---|---|---|---|---|---|---|---|---|---|---|---|
| Sample Identification | | Residential & Commercial I Drinking Water | Residential & Commercial I Groundwater Volatilization to Indoor Air Inhalation | Groundwater Contact | AHI-SB-14 | GP-1 | GP-2 | GP-3 | GP-3 | GP-4 | GP-4 | GP-7 | GP-11 | GP-13 | GP-15 | GP-16 | GP-17 | GP-18 | GP-19 | GP-19 | GP-20 | GP-20 | TW-3 | VAS-1 | VAS-1 |
| Sample Date | | | | | 11/20/2001 | 7/11/2002 | 7/11/2002 | 7/12/2002 | 7/12/2002 | 7/15/2002 | 7/15/2002 | 7/17/2002 | 7/18/2002 | 7/19/2002 | 7/19/2002 | 7/19/2002 | 7/19/2002 | 7/22/2002 | 7/23/2002 | 7/23/2002 | 7/23/2002 | 7/23/2002 | 7/11/2002 | 7/10/2002 | 7/10/2002 |
| Sample depth | | | | | | (28-32) | (28-32) | (20-24) | (30-34) | (20-24) | (30-32) | (29-33) | (19-23) | (16-20) | (18-22) | (22-25) | (18-22) | (26-30) | (18-22) | (23-27) | (15-19) | (25-27) | (22-27) | (15-19) | (28-32) |
| Sample duplicate | | | | | | | | | | | | | | | | | | (Original) | | | | | | | |
| | Units | a | b | c | | | | | | | | | | | | | | | | | | | | | |
| *VOCs* | | | | | | | | | | | | | | | | | | | | | | | | | |
| 1,1,1,2-Tetrachloroethane | ug/L | 77 | 15000 | 30000 | ND(1.0) | ND(1.0) | ND(1.0) | ND(1.0) | ND(1.0) | ND(1.0) | ND(1.0) | ND(1.0) | ND(25) | ND(1000) | ND(10) | ND(200) | ND(200) | ND(1.0) | ND(50) | ND(1.0) | ND(50) | ND(50) | ND(1.0) | ND(1.0) | ND(1.0) |
| 1,1,1-Trichloroethane | ug/L | 200 | 660000 | 1300000 | ND(1.0) | ND(1.0) | ND(1.0) | ND(1.0) | ND(1.0) | ND(1.0) | ND(1.0) | ND(1.0) | ND(25) | ND(1000) | ND(10) | ND(200) | ND(200) | ND(1.0) | ND(50) | ND(1.0) | ND(50) | ND(50) | ND(1.0) | ND(1.0) | ND(1.0) |
| 1,1,2,2-Tetrachloroethane | ug/L | 8.5 | 12000 | 4700 | ND(1.0) | ND(1.0) | ND(1.0) | ND(1.0) | ND(1.0) | ND(1.0) | ND(1.0) | ND(1.0) | ND(25) | ND(1000) | ND(10) | ND(200) | ND(200) | ND(1.0) | ND(50) | ND(1.0) | ND(50) | ND(50) | ND(1.0) | ND(1.0) | ND(1.0) |
| 1,1,2-Trichloroethane | ug/L | 5 | 17000 | 21000 | ND(1.0) | ND(1.0) | ND(1.0) | ND(1.0) | ND(1.0) | ND(1.0) | ND(1.0) | ND(1.0) | ND(25) | ND(1000) | ND(10) | ND(200) | ND(200) | ND(1.0) | ND(50) | ND(1.0) | ND(50) | ND(50) | ND(1.0) | ND(1.0) | ND(1.0) |
| 1,1-Dichloroethane | ug/L | 880 | 1000000 | 2400000 | ND(1.0) | – | – | – | – | – | – | – | – | – | – | – | – | – | – | – | – | – | – | – | – |
| 1,1-Dichloroethene | ug/L | 7 | 200 | 11000 | ND(1.0) | ND(1.0) | ND(1.0) | ND(1.0) | ND(1.0) | ND(1.0) | ND(1.0) | ND(1.0) | ND(25) | ND(1000) | ND(10) | ND(200) | ND(200) | ND(1.0) | ND(50) | ND(1.0) | ND(50) | ND(50) | ND(1.0) | ND(1.0) | ND(1.0) |
| 1,1-Dichloropropene | ug/L | | | | ND(1.0) | – | – | – | – | – | – | – | – | – | – | – | – | – | – | – | – | – | – | – | – |
| 1,2,3-Trichlorobenzene | ug/L | | | | ND(5.0) | ND(5.0) | ND(5.0) | ND(5.0) | ND(5.0) | ND(5.0) | ND(5.0) | ND(5.0) | ND(120) | ND(5000) | ND(50) | ND(1000) | ND(1000) | ND(5.0) | ND(250) | ND(5.0) | ND(250) | ND(250) | ND(5.0) | ND(5.0) | ND(5.0) |
| 1,2,3-Trichloropropane | ug/L | 42 | ID | 84000 | ND(1.0) | ND(1.0) | ND(1.0) | ND(1.0) | ND(1.0) | ND(1.0) | ND(1.0) | ND(1.0) | ND(25) | ND(1000) | ND(10) | ND(200) | ND(200) | ND(1.0) | ND(50) | ND(1.0) | ND(50) | ND(50) | ND(1.0) | ND(1.0) | ND(1.0) |
| 1,2,4-Trichlorobenzene | ug/L | 70 | 300000 | 19000 | ND(5.0) | ND(5.0) | ND(5.0) | ND(5.0) | ND(5.0) | ND(5.0) | ND(5.0) | ND(5.0) | ND(120) | ND(5000) | ND(50) | ND(1000) | ND(1000) | ND(5.0) | ND(250) | ND(5.0) | ND(250) | ND(250) | ND(5.0) | ND(5.0) | ND(5.0) |
| 1,2,4-Trimethylbenzene | ug/L | 63 | 56000 | 56000 | ND(1.0) | ND(1.0) | ND(1.0) | ND(1.0) | ND(1.0) | ND(1.0) | ND(1.0) | ND(1.0) | ND(25) | ND(1000) | ND(10) | ND(200) | ND(200) | ND(1.0) | ND(50) | ND(1.0) | ND(50) | ND(50) | ND(1.0) | ND(1.0) | ND(1.0) |
| 1,2-Dibromo-3-chloropropane (DBCP) | ug/L | 0.2 | 1200 | 390 | ND(1.0) | ND(5.0) | ND(5.0) | ND(5.0) | ND(5.0) | ND(5.0) | ND(5.0) | ND(5.0) | ND(120) | ND(5000) | ND(50) | ND(1000) | ND(1000) | ND(5.0) | ND(250) | ND(5.0) | ND(250) | ND(250) | ND(5.0) | ND(5.0) | ND(5.0) |
| 1,2-Dibromoethane (Ethylene Dibromide) | ug/L | 1 | 2400 | 25 | ND(1.0) | ND(1.0) | ND(1.0) | ND(1.0) | ND(1.0) | ND(1.0) | ND(1.0) | ND(1.0) | ND(25) | ND(1000) | ND(10) | ND(200) | ND(200) | ND(1.0) | ND(50) | ND(1.0) | ND(50) | ND(50) | ND(1.0) | ND(1.0) | ND(1.0) |
| 1,2-Dichlorobenzene | ug/L | 600 | 160000 | 160000 | ND(1.0) | ND(1.0) | ND(1.0) | ND(1.0) | ND(1.0) | ND(1.0) | ND(1.0) | ND(1.0) | ND(25) | ND(1000) | ND(10) | ND(200) | ND(200) | ND(1.0) | ND(50) | ND(1.0) | ND(50) | ND(50) | ND(1.0) | ND(1.0) | ND(1.0) |
| 1,2-Dichloroethane | ug/L | 5 | 9600 | 19000 | ND(1.0) | ND(1.0) | ND(1.0) | ND(1.0) | ND(1.0) | ND(1.0) | ND(1.0) | ND(1.0) | ND(25) | ND(1000) | ND(10) | ND(200) | ND(200) | ND(1.0) | ND(50) | ND(1.0) | ND(50) | ND(50) | ND(1.0) | ND(1.0) | ND(1.0) |
| 1,2-Dichloropropane | ug/L | 5 | 16000 | 16000 | ND(1.0) | ND(1.0) | ND(1.0) | ND(1.0) | ND(1.0) | ND(1.0) | ND(1.0) | ND(1.0) | ND(25) | ND(1000) | ND(10) | ND(200) | ND(200) | ND(1.0) | ND(50) | ND(1.0) | ND(50) | ND(50) | ND(1.0) | ND(1.0) | ND(1.0) |
| 1,3,5-Trimethylbenzene | ug/L | 72 | 61000 | 61000 | ND(1.0) | ND(1.0) | ND(1.0) | ND(1.0) | ND(1.0) | ND(1.0) | ND(1.0) | ND(1.0) | ND(25) | ND(1000) | ND(10) | ND(200) | ND(200) | ND(1.0) | ND(50) | ND(1.0) | ND(50) | ND(50) | ND(1.0) | ND(1.0) | ND(1.0) |
| 1,3-Dichlorobenzene | ug/L | 6.6 | ID | 2000 | ND(1.0) | ND(1.0) | ND(1.0) | ND(1.0) | ND(1.0) | ND(1.0) | ND(1.0) | ND(1.0) | ND(25) | ND(1000) | ND(10) | ND(200) | ND(200) | ND(1.0) | ND(50) | ND(1.0) | ND(50) | ND(50) | ND(1.0) | ND(1.0) | ND(1.0) |
| 1,3-Dichloropropane | ug/L | | | | ND(1.0) | – | – | – | – | – | – | – | – | – | – | – | – | – | – | – | – | – | – | – | – |
| 1,4-Dichlorobenzene | ug/L | 75 | 16000 | 6400 | ND(1.0) | ND(1.0) | ND(1.0) | ND(1.0) | ND(1.0) | ND(1.0) | ND(1.0) | ND(1.0) | ND(25) | ND(1000) | ND(10) | ND(200) | ND(200) | ND(1.0) | ND(50) | ND(1.0) | ND(50) | ND(50) | ND(1.0) | ND(1.0) | ND(1.0) |
| 2,2-Dichloropropane | ug/L | | | | ND(1.0) | – | – | – | – | – | – | – | – | – | – | – | – | – | – | – | – | – | – | – | – |
| 2-Butanone (Methyl Ethyl Ketone) | ug/L | 13000 | 240000000 | 240000000 | – | ND(5.0) | ND(5.0) | ND(5.0) | ND(5.0) | ND(5.0) | ND(5.0) | ND(5.0) | ND(120) | ND(5000) | ND(50) | ND(1000) | ND(1000) | ND(5.0) | ND(250) | ND(5.0) | ND(250) | ND(250) | ND(5.0) | ND(5.0) | ND(5.0) |
| 2-Chloroethyl vinyl ether | ug/L | ID | ID | ID | – | – | – | – | – | – | – | – | – | – | – | – | – | – | – | – | – | – | – | – | – |
| 2-Chlorotoluene | ug/L | 150 | 220000 | 44000 | ND(1.0) | – | – | – | – | – | – | – | – | – | – | – | – | – | – | – | – | – | – | – | – |
| 2-Hexanone | ug/L | 1000 | 4200000 | 5200000 | – | ND(5.0) | ND(5.0) | ND(5.0) | ND(5.0) | ND(5.0) | ND(5.0) | ND(5.0) | ND(120) | ND(5000) | ND(50) | ND(1000) | ND(1000) | ND(5.0) | ND(250) | ND(5.0) | ND(250) | ND(250) | ND(5.0) | ND(5.0) | ND(5.0) |
| 2-Methylnaphthalene | ug/L | 260 | ID | 25000 | ND(5.0) | ND(5.0) | ND(5.0) | ND(5.0) | ND(5.0) | ND(5.0) | ND(5.0) | ND(5.0) | ND(120) | ND(5000) | ND(50) | ND(1000) | ND(1000) | ND(5.0) | ND(250) | ND(5.0) | ND(250) | ND(250) | ND(5.0) | ND(5.0) | ND(5.0) |
| 2-Phenylbutane (sec-Butylbenzene) | ug/L | 80 | ID | 4400 | ND(1.0) | ND(1.0) | ND(1.0) | ND(1.0) | ND(1.0) | ND(1.0) | ND(1.0) | ND(1.0) | ND(25) | ND(1000) | ND(10) | ND(200) | ND(200) | ND(1.0) | ND(50) | ND(1.0) | ND(50) | ND(50) | ND(1.0) | ND(1.0) | ND(1.0) |
| 4-Chlorotoluene | ug/L | | | | ND(1.0) | – | – | – | – | – | – | – | – | – | – | – | – | – | – | – | – | – | – | – | – |
| 4-Methyl-2-Pentanone (Methyl Isobutyl Ketone) | ug/L | 1800 | 20000000 | 13000000 | – | ND(5.0) | ND(5.0) | ND(5.0) | ND(5.0) | ND(5.0) | ND(5.0) | ND(5.0) | ND(120) | ND(5000) | ND(50) | ND(1000) | ND(1000) | ND(5.0) | ND(250) | ND(5.0) | ND(250) | ND(250) | ND(5.0) | ND(5.0) | ND(5.0) |
| Acetone | ug/L | 730 | 1000000000 | 31000000 | – | ND(20) | ND(20) | ND(20) | ND(20) | ND(20) | ND(20) | ND(20) | ND(500) | ND(20000) | ND(200) | ND(4000) | ND(4000) | ND(20) | ND(1000) | ND(20) | ND(1000) | ND(1000) | ND(20) | ND(20) | ND(20) |
| Acrolein | ug/L | 120 | 2100 | 3400000 | – | – | – | – | – | – | – | – | – | – | – | – | – | – | – | – | – | – | – | – | – |
| Acrylonitrile | ug/L | 2.6 | 34000 | 14000 | – | ND(5.0) | ND(5.0) | ND(5.0) | ND(5.0) | ND(5.0) | ND(5.0) | ND(5.0) | ND(120) | ND(5000) | ND(50) | ND(1000) | ND(1000) | ND(5.0) | ND(250) | ND(5.0) | ND(250) | ND(250) | ND(5.0) | ND(5.0) | ND(5.0) |
| Benzene | ug/L | 5 | 5600 | 11000 | ND(1.0) | ND(1.0) | ND(1.0) | ND(1.0) | ND(1.0) | ND(1.0) | ND(1.0) | ND(1.0) | ND(25) | ND(1000) | ND(10) | ND(200) | ND(200) | ND(1.0) | ND(50) | ND(1.0) | ND(50) | ND(50) | ND(1.0) | ND(1.0) | ND(1.0) |
| Bromobenzene | ug/L | 18 | 180000 | 12000 | ND(1.0) | ND(1.0) | ND(1.0) | ND(1.0) | ND(1.0) | ND(1.0) | ND(1.0) | ND(1.0) | ND(25) | ND(1000) | ND(10) | ND(200) | ND(200) | ND(1.0) | ND(50) | ND(1.0) | ND(50) | ND(50) | ND(1.0) | ND(1.0) | ND(1.0) |
| Bromodichloromethane | ug/L | 100 | 4800 | 14000 | ND(1.0) | ND(1.0) | ND(1.0) | ND(1.0) | ND(1.0) | ND(1.0) | ND(1.0) | ND(1.0) | ND(25) | ND(1000) | ND(10) | ND(200) | ND(200) | ND(1.0) | ND(50) | ND(1.0) | ND(50) | ND(50) | ND(1.0) | ND(1.0) | ND(1.0) |
| Bromoform | ug/L | 100 | 470000 | 140000 | ND(1.0) | ND(1.0) | ND(1.0) | ND(1.0) | ND(1.0) | ND(1.0) | ND(1.0) | ND(1.0) | ND(25) | ND(1000) | ND(10) | ND(200) | ND(200) | ND(1.0) | ND(50) | ND(1.0) | ND(50) | ND(50) | ND(1.0) | ND(1.0) | ND(1.0) |
| Bromomethane (Methyl Bromide) | ug/L | 10 | 4000 | 70000 | ND(1.0) | ND(5.0) | ND(5.0) | ND(5.0) | ND(5.0) | ND(5.0) | ND(5.0) | ND(5.0) | ND(120) | ND(5000) | ND(50) | ND(1000) | ND(1000) | ND(5.0) | ND(250) | ND(5.0) | ND(250) | ND(250) | ND(5.0) | ND(5.0) | ND(5.0) |
| Carbon disulfide | ug/L | 800 | 250000 | 1200000 | – | ND(1.0) | ND(1.0) | ND(1.0) | ND(1.0) | ND(1.0) | ND(1.0) | ND(1.0) | ND(25) | ND(1000) | ND(10) | ND(200) | ND(200) | ND(1.0) | ND(50) | ND(1.0) | ND(50) | ND(50) | ND(1.0) | ND(1.0) | ND(1.0) |
| Carbon tetrachloride | ug/L | 5 | 370 | 4600 | ND(1.0) | ND(1.0) | ND(1.0) | ND(1.0) | ND(1.0) | ND(1.0) | ND(1.0) | ND(1.0) | ND(25) | ND(1000) | ND(10) | ND(200) | ND(200) | ND(1.0) | ND(50) | ND(1.0) | ND(50) | ND(50) | ND(1.0) | ND(1.0) | ND(1.0) |
| Chlorobenzene | ug/L | 100 | 210000 | 86000 | ND(1.0) | ND(1.0) | ND(1.0) | ND(1.0) | ND(1.0) | ND(1.0) | ND(1.0) | ND(1.0) | ND(25) | ND(1000) | ND(10) | ND(200) | ND(200) | ND(1.0) | ND(50) | ND(1.0) | ND(50) | ND(50) | ND(1.0) | ND(1.0) | ND(1.0) |
| Chlorobromomethane | ug/L | | | | ND(1.0) | ND(1.0) | ND(1.0) | ND(1.0) | ND(1.0) | ND(1.0) | ND(1.0) | ND(1.0) | ND(25) | ND(1000) | ND(10) | ND(200) | ND(200) | ND(1.0) | ND(50) | ND(1.0) | ND(50) | ND(50) | ND(1.0) | ND(1.0) | ND(1.0) |
| Chloroethane | ug/L | 430 | 5700000 | 440000 | ND(1.0) | ND(5.0) | ND(5.0) | ND(5.0) | ND(5.0) | ND(5.0) | ND(5.0) | ND(5.0) | ND(120) | ND(5000) | ND(50) | ND(1000) | ND(1000) | ND(5.0) | ND(250) | ND(5.0) | ND(250) | ND(250) | ND(5.0) | ND(5.0) | ND(5.0) |
| Chloroform (Trichloromethane) | ug/L | 100 | 28000 | 150000 | ND(1.0) | ND(1.0) | ND(1.0) | ND(1.0) | ND(1.0) | ND(1.0) | ND(1.0) | ND(1.0) | ND(25) | ND(1000) | ND(10) | ND(200) | ND(200) | ND(1.0) | ND(50) | ND(1.0) | ND(50) | ND(50) | ND(1.0) | ND(1.0) | ND(1.0) |
| Chloromethane (Methyl Chloride) | ug/L | 260 | 8600 | 490000 | ND(1.0) | ND(5.0) | ND(5.0) | ND(5.0) | ND(5.0) | ND(5.0) | ND(5.0) | ND(5.0) | ND(120) | ND(5000) | ND(50) | ND(1000) | ND(1000) | ND(5.0) | ND(250) | ND(5.0) | ND(250) | ND(250) | ND(5.0) | ND(5.0) | ND(5.0) |
| cis-1,2-Dichloroethene | ug/L | 70 | 93000 | 200000 | 32.0 | ND(1.0) | ND(1.0) | 16 | ND(1.0) | 6.9 | 17 | 2.5 | ND(25) | ND(1000) | ND(10) | ND(200) | ND(200) | 29 | ND(50) | ND(1.0) | ND(50) | ND(50) | ND(1.0) | ND(1.0) | ND(1.0) |
| Cymene (p-Isopropyltoluene) | ug/L | | | | – | ND(1.0) | ND(1.0) | ND(1.0) | ND(1.0) | ND(1.0) | ND(1.0) | ND(1.0) | ND(25) | ND(1000) | ND(10) | ND(200) | ND(200) | ND(1.0) | ND(50) | ND(1.0) | ND(50) | ND(50) | ND(1.0) | ND(1.0) | ND(1.0) |
| Dibromochloromethane | ug/L | 100 | 14000 | 18000 | ND(1.0) | ND(1.0) | ND(1.0) | ND(1.0) | ND(1.0) | ND(1.0) | ND(1.0) | ND(1.0) | ND(25) | ND(1000) | ND(10) | ND(200) | ND(200) | ND(1.0) | ND(50) | ND(1.0) | ND(50) | ND(50) | ND(1.0) | ND(1.0) | ND(1.0) |
| Dibromomethane | ug/L | 80 | ID | 530000 | ND(5.0) | ND(1.0) | ND(1.0) | ND(1.0) | ND(1.0) | ND(1.0) | ND(1.0) | ND(1.0) | ND(25) | ND(1000) | ND(10) | ND(200) | ND(200) | ND(1.0) | ND(50) | ND(1.0) | ND(50) | ND(50) | ND(1.0) | ND(1.0) | ND(1.0) |
| Dichlorodifluoromethane (CFC-12) | ug/L | 1700 | 220000 | 300000 | ND(1.0) | ND(5.0) | ND(5.0) | ND(5.0) | ND(5.0) | ND(5.0) | ND(5.0) | ND(5.0) | ND(120) | ND(5000) | ND(50) | ND(5.0) | ND(1000) | ND(5.0) | ND(250) | ND(5.0) | ND(250) | ND(250) | ND(5.0) | ND(5.0) | ND(5.0) |
| Ethyl Ether | ug/L | 10 | 61000000 | 35000000 | – | ND(5.0) | ND(5.0) | ND(5.0) | ND(5.0) | ND(5.0) | ND(5.0) | ND(5.0) | ND(120) | ND(5000) | ND(50) | ND(1000) | ND(1000) | ND(5.0) | ND(250) | ND(5.0) | ND(250) | ND(250) | ND(5.0) | ND(5.0) | ND(5.0) |
| Ethylbenzene | ug/L | 74 | 110000 | 170000 | ND(1.0) | ND(1.0) | ND(1.0) | ND(1.0) | ND(1.0) | ND(1.0) | ND(1.0) | ND(1.0) | ND(25) | ND(1000) | ND(10) | ND(200) | ND(200) | 1.7 | ND(50) | ND(1.0) | ND(50) | ND(50) | ND(1.0) | ND(1.0) | ND(1.0) |
| Hexachlorobutadiene | ug/L | 15 | 1600 | 400 | ND(1.0) | – | – | – | – | – | – | – | – | – | – | – | – | – | – | – | – | – | – | – | – |
| Hexachloroethane | ug/L | 7.3 | 27000 | 1900 | – | ND(5.0) | ND(5.0) | ND(5.0) | ND(5.0) | ND(5.0) | ND(5.0) | ND(5.0) | ND(120) | ND(5000) | ND(50) | ND(1000) | ND(1000) | ND(5.0) | ND(250) | ND(5.0) | ND(250) | ND(250) | ND(5.0) | ND(5.0) | ND(5.0) |
| Iodomethane | ug/L | | | | – | ND(1.0) | ND(1.0) | ND(1.0) | ND(1.0) | ND(1.0) | ND(1.0) | ND(1.0) | ND(25) | ND(1000) | ND(10) | ND(200) | ND(200) | ND(1.0) | ND(50) | ND(1.0) | ND(50) | ND(50) | ND(1.0) | ND(1.0) | ND(1.0) |
| Isopropylbenzene | ug/L | 800 | 56000 | 56000 | ND(5.0) | ND(1.0) | ND(1.0) | ND(1.0) | ND(1.0) | ND(1.0) | ND(1.0) | ND(1.0) | ND(25) | ND(1000) | ND(10) | ND(200) | ND(200) | ND(1.0) | ND(50) | ND(1.0) | ND(50) | ND(50) | ND(1.0) | ND(1.0) | ND(1.0) |
| Isopropyltoluene | ug/L | | | | ND(1.0) | – | – | – | – | – | – | – | – | – | – | – | – | – | – | – | – | – | – | – | – |
| Methyl Tert Butyl Ether | ug/L | 40 | 47000000 | 610000 | – | ND(1.0) | ND(1.0) | 9.2 | ND(1.0) | 9.8 | 8.7 | 18 | ND(25) | ND(1000) | ND(10) | ND(200) | ND(200) | 11 | ND(50) | 35 | ND(50) | ND(50) | ND(1.0) | ND(1.0) | 1.5 |
| Methylene chloride | ug/L | 5 | 220000 | 220000 | ND(5.0) | ND(5.0) | ND(5.0) | ND(5.0) | ND(5.0) | ND(5.0) | ND(5.0) | ND(5.0) | ND(120) | ND(5000) | ND(50) | ND(1000) | ND(1000) | ND(5.0) | ND(250) | ND(5.0) | ND(250) | ND(250) | ND(5.0) | ND(5.0) | ND(5.0) |
| Naphthalene | ug/L | 520 | 31000 | 31000 | ND(5.0) | ND(5.0) | ND(5.0) | ND(5.0) | ND(5.0) | ND(5.0) | ND(5.0) | ND(5.0) | ND(120) | ND(5000) | ND(50) | ND(1000) | ND(1000) | ND(5.0) | ND(250) | ND(5.0) | ND(250) | ND(250) | ND(5.0) | ND(5.0) | ND(5.0) |
| n-Butylbenzene | ug/L | 80 | ID | 5900 | ND(1.0) | ND(1.0) | ND(1.0) | ND(1.0) | ND(1.0) | ND(1.0) | ND(1.0) | ND(1.0) | ND(25) | ND(1000) | ND(10) | ND(200) | ND(200) | ND(1.0) | ND(50) | ND(1.0) | ND(50) | ND(50) | ND(1.0) | ND(1.0) | ND(1.0) |
| n-Propylbenzene | ug/L | 80 | ID | 15000 | ND(1.0) | ND(1.0) | ND(1.0) | ND(1.0) | ND(1.0) | ND(1.0) | ND(1.0) | ND(1.0) | ND(25) | ND(1000) | ND(10) | ND(200) | ND(200) | ND(1.0) | ND(50) | ND(1.0) | ND(50) | ND(50) | ND(1.0) | ND(1.0) | ND(1.0) |
| Styrene | ug/L | 100 | 170000 | 9700 | ND(1.0) | ND(1.0) | ND(1.0) | ND(1.0) | ND(1.0) | ND(1.0) | ND(1.0) | ND(1.0) | ND(25) | ND(1000) | ND(10) | ND(200) | ND(200) | ND(1.0) | ND(50) | ND(1.0) | ND(50) | ND(50) | ND(1.0) | ND(1.0) | ND(1.0) |
| tert-Butylbenzene | ug/L | 80 | ID | 8900 | ND(1.0) | ND(1.0) | ND(1.0) | ND(1.0) | ND(1.0) | ND(1.0) | ND(1.0) | ND(1.0) | ND(25) | ND(1000) | ND(10) | ND(200) | ND(200) | ND(1.0) | ND(50) | ND(1.0) | ND(50) | ND(50) | ND(1.0) | ND(1.0) | ND(1.0) |
| Tetrachloroethene | ug/L | 5 | 25000 | 12000 | 3110* | 3.7 | 45* | 26000*** | 8500* | 17000** | 380* | 3.5 | 410* | 74000*** | 590* | 3000* | 7900* | 2.4 | 1900* | 30* | 2500* | 310* | ND(1.0) | 80* | 1.5 |
| Tetrahydrofuran | ug/L | 95 | 6900000 | 1600000 | – | ND(5.0) | ND(5.0) | ND(5.0) | ND(5.0) | ND(5.0) | ND(5.0) | ND(5.0) | ND(120) | ND(5000) | ND(50) | ND(1000) | ND(1000) | ND(5.0) | ND(250) | ND(5.0) | ND(250) | ND(250) | ND(5.0) | ND(5.0) | ND(5.0) |
| Toluene | ug/L | 790 | 530000 | 530000 | ND(1.0) | ND(1.0) | 1.4 | 1.4 | ND(1.0) | ND(1.0) | ND(1.0) | ND(1.0) | ND(25) | ND(1000) | ND(10) | ND(200) | ND(200) | ND(1.0) | ND(50) | 1.0 | ND(50) | ND(50) | ND(1.0) | ND(1.0) | ND(1.0) |
| trans-1,2-Dichloroethene | ug/L | 100 | 85000 | 220000 | ND(1.0) | ND(1.0) | ND(1.0) | 1.8 | ND(1.0) | ND(1.0) | 2.0 | ND(1.0) | ND(25) | ND(1000) | ND(10) | ND(200) | ND(200) | 2.8 | ND(50) | ND(1.0) | ND(50) | ND(50) | ND(1.0) | ND(1.0) | ND(1.0) |
| trans-1,4-Dichloro-2-butene | ug/L | | | | – | ND(5.0) | ND(5.0) | ND(5.0) | ND(5.0) | ND(5.0) | ND(5.0) | ND(5.0) | ND(120) | ND(5000) | ND(50) | ND(1000) | ND(1000) | ND(5.0) | ND(250) | ND(5.0) | ND(250) | ND(250) | ND(5.0) | ND(5.0) | ND(5.0) |
| Trichloroethene | ug/L | 5 | 15000 | 22000 | 12.0* | ND(1.0) | ND(1.0) | 2.1 | ND(1.0) | 2.0 | ND(1.0) | ND(1.0) | ND(25) | ND(1000) | ND(10) | ND(200) | ND(200) | ND(1.0) | 100* | 1.3 | ND(50) | ND(50) | ND(1.0) | 2.5 | ND(1.0) |
| Trichlorofluoromethane (CFC-11) | ug/L | 2600 | 1100000 | 1100000 | ND(1.0) | ND(1.0) | ND(1.0) | ND(1.0) | ND(1.0) | ND(1.0) | ND(1.0) | ND(1.0) | ND(25) | ND(1000) | ND(10) | ND(200) | ND(200) | ND(1.0) | ND(50) | ND(1.0) | ND(50) | ND(50) | ND(1.0) | ND(1.0) | ND(1.0) |
| Vinyl acetate | ug/L | 640 | 4100000 | 8000000 | – | – | – | – | – | – | – | – | – | – | – | – | – | – | – | – | – | – | – | – | – |
| Vinyl chloride | ug/L | 2 | 1100 | 1000 | ND(1.0) | ND(1.0) | ND(1.0) | ND(1.0) | ND(1.0) | ND(1.0) | ND(1.0) | ND(1.0) | ND(25) | ND(1000) | ND(10) | ND(200) | ND(200) | ND(1.0) | ND(50) | ND(1.0) | ND(50) | ND(50) | ND(1.0) | ND(1.0) | ND(1.0) |
| Xylene (total) | ug/L | 280 | 190000 | 190000 | ND(3.0) | ND(3.0) | ND(3.0) | ND(3.0) | ND(3.0) | ND(3.0) | ND(3.0) | ND(3.0) | ND(75) | ND(3000) | ND(30) | ND(400) | ND(400) | 2.8 | ND(250) | ND(3.0) | ND(250) | ND(3.0) | ND(3.0) | ND(3.0) | ND(3.0) |
| trans-1,3-Dichloropropene | ug/L | 8.5 | 3900 | 5500 | ND(1.0) | ND(1.0) | ND(1.0) | ND(1.0) | ND(1.0) | ND(1.0) | ND(1.0) | ND(1.0) | ND(25) | ND(1000) | ND(10) | ND(200) | ND(200) | ND(1.0) | ND(50) | ND(1.0) | ND(50) | ND(50) | ND(1.0) | ND(1.0) | ND(1.0) |
| cis-1,3-Dichloropropene | ug/L | | | | ND(1.0) | ND(1.0) | ND(1.0) | ND(1.0) | ND(1.0) | ND(1.0) | ND(1.0) | ND(1.0) | ND(25) | ND(1000) | ND(10) | ND(200) | ND(200) | ND(1.0) | ND(50) | ND(1.0) | ND(50) | ND(50) | ND(1.0) | ND(1.0) | ND(1.0) |
| 1,3-Dichloropropene - total | ug/L | | | | ND(1.0) | ND(1.0) | ND(1.0) | ND(1.0) | ND(1.0) | ND(1.0) | ND(1.0) | ND(1.0) | ND(25) | ND(1000) | ND(10) | ND(200) | ND(200) | ND(1.0) | ND(50) | ND(1.0) | ND(50) | ND(50) | ND(1.0) | ND(1.0) | ND(1.0) |

Notes: Boxed Value - Indicates exceedence of applicable Part 201 criteria
ID - Inadequate data to develop criteria

TABLE 1

BROADWAY VILLAGE AT LOWERTOWN
SOIL ANALYTICAL RESULTS

| Location Name | | Res/Comm. I Drinking Water Protection Criteria | Res/Comm. I Soil Volatilization To Indoor Air Criteria | Res/Comm. I Direct Contact Criteria | AH-2 | AH-4 | AH-4 | AH-4 | AH-5 | AH-6 | AH-6 | AH-7 | AH-7 | AH-7 | AH-13 | AH-13 | AH-17 | AH-17 | AH-18 | AH-18 | AH-21 | AH-21 | AH-30 |
|---|---|---|---|---|---|---|---|---|---|---|---|---|---|---|---|---|---|---|---|---|---|---|---|
| Sample Name | | | | | AH2 6 | AH4 2 | AH4 6 | AH-4 6 | AH5 6 | AH6 2 | AH6 6 | AH7 2 | AH-7 2 | AH7 6 | AH13 2 | AH13 6 | AH17 6 | AH17 12 | AH18 2 | AH18 6 | AH21 2 | AH21 6 | AH30 2 |
| Sample Date | | | | | 11/11/2002 | 11/11/2002 | 11/11/2002 | 11/11/2002 | 11/11/2002 | 11/11/2002 | 11/11/2002 | 11/11/2002 | 11/11/2002 | 11/11/2002 | 11/11/2002 | 11/11/2002 | 11/12/2002 | 11/12/2002 | 11/12/2002 | 11/12/2002 | 11/12/2002 | 11/12/2002 | 11/13/2002 |
| Depth | Units | a | b | c | 6-ft | 2-ft | 6-ft | 6-ft | 6-ft | 2-ft | 6-ft | 2-ft | 2-ft | 6-ft | 2-ft | 6-ft | 6-ft | 12-ft BGS | 2-ft | 6-ft | 2-ft | 6-ft | 2-ft |
| ***Metals*** | | | | | | | | | | | | | | | | | | | | | | | |
| Arsenic | ug/kg | 4600 | – | 7600 | – | – | – | – | – | – | – | – | – | – | – | – | – | – | – | – | – | – | – |
| ***Volatile Organic Compounds*** | | | | | | | | | | | | | | | | | | | | | | | |
| 1,2,4-Trimethylbenzene | ug/Kg | 2100 | 110000 | 110000 | – | – | – | ND(100) | – | – | – | – | ND(100) | – | – | – | – | – | – | – | – | – | – |
| 1,3,5-Trimethylbenzene | ug/Kg | 1800 | 94000 | 94000 | – | – | – | ND(100) | – | – | – | – | ND(100) | – | – | – | – | – | – | – | – | – | – |
| Naphthalene | ug/Kg | 35000 | 250000 | 16000000 | – | – | – | ND(250) | – | – | – | – | ND(250) | – | – | – | – | – | – | – | – | – | – |
| Ethylbenzene | ug/Kg | 1500 | 87000 | 140000 | – | – | – | ND(50) | – | – | – | – | ND(50) | – | – | – | – | – | – | – | – | – | – |
| Tetrachloroethene (PCE) | ug/kg | 100 | 11000 | 88000 | 159 [a] | 149 [a] | 420 [a] | 440 [a] | 818 [a] | 218 [a] | 1119 [a] | 311 [a] | 1700 [a] | 278 [a] | 1579 [a] | 5740 [a] | 133 [a] | 112 [a] | 648 [a] | 1278 [a] | ND(50) | 43 | 946 [a] |
| Xylenes | ug/Kg | 5600 | 150000 | 150000 | – | – | – | ND(150) | – | – | – | – | ND(150) | – | – | – | – | – | – | – | – | – | – |

| Location Name | | Res/Comm. I Drinking Water Protection Criteria | Res/Comm. I Soil Volatilization To Indoor Air Criteria | Res/Comm. I Direct Contact Criteria | AH-30 | AH-31 | AH-31 | AH-32 | AH-32 | AH-34 | AH-35 | AH-35 | AH-35 | AH-47 | GP-1 | GP-1 | GP-2 | GP-2 | GP-3 | GP-3 | GP-3 | GP-4 | GP-4 |
|---|---|---|---|---|---|---|---|---|---|---|---|---|---|---|---|---|---|---|---|---|---|---|---|
| Sample Name | | | | | AH30 6 | AH31 2 | AH31 6 | AH32 2 | AH32 10 | AH 34 | AH35 2 | AH35 6 | AH35 10 | AH 47 | GP-1 | GP-1 | GP-2 | GP-2 | GP-3 | GP-3 | M-102 | GP-4 | GP-4 |
| Sample Date | | | | | 11/13/2002 | 11/12/2002 | 11/12/2002 | 11/13/2002 | 11/13/2002 | 12/10/2002 | 11/11/2002 | 11/11/2002 | 11/11/2002 | 12/10/2002 | 7/11/2002 | 7/11/2002 | 7/11/2002 | 7/11/2002 | 7/12/2002 | 7/12/2002 | 7/12/2002 | 7/15/2002 | 7/15/2002 |
| Depth | Units | a | b | c | 6-ft | 2-ft | 6-ft | 2-ft | 10-ft BGS | 11.5-ft BGS | 2-ft | 6-ft | 10-ft BGS | 10-ft BGS | 12-13 ft BGS | 13-14 ft BGS | 13-14 ft BGS | 14-15 ft BGS | 10-11 ft BGS | 11-12 ft BGS | 11-12 ft BGS | 8-9 ft BGS | 12-13 ft BGS |
| ***Metals*** | | | | | | | | | | | | | | | | | | | | | | | |
| Arsenic | ug/kg | 4600 | – | 7600 | – | – | – | – | – | – | – | – | – | – | – | – | – | – | – | – | – | – | – |
| ***Volatile Organic Compounds*** | | | | | | | | | | | | | | | | | | | | | | | |
| 1,2,4-Trimethylbenzene | ug/Kg | 2100 | 110000 | 110000 | – | – | – | – | – | ND(100) | – | – | – | ND(100) | ND(50) | ND(53) | ND(240) | ND(200) | ND(49) | ND(54) | ND(58) | ND(57) | ND(200) |
| 1,3,5-Trimethylbenzene | ug/Kg | 1800 | 94000 | 94000 | – | – | – | – | – | ND(100) | – | – | – | ND(100) | ND(50) | ND(53) | ND(240) | ND(200) | ND(49) | ND(54) | ND(58) | ND(57) | ND(200) |
| Naphthalene | ug/Kg | 35000 | 250000 | 16000000 | – | – | – | – | – | ND(250) | | – | | ND(250) | ND(250) | ND(250) | ND(1200) | ND(980) | ND(250) | ND(270) | ND(270) | ND(290) | ND(1000) |
| Ethylbenzene | ug/Kg | 1500 | 87000 | 140000 | – | – | – | – | – | ND(50) | – | – | – | ND(50) | ND(50) | ND(53) | ND(240) | ND(200) | ND(49) | ND(54) | ND(58) | ND(57) | ND(20) |
| Tetrachloroethene (PCE) | ug/kg | 100 | 11000 | 88000 | 1020 [a] | 66 | ND(50) | 123 [a] | 194 [a] | 110 [a] | ND(50) | 117 [a] | ND(50) | 500 [a] | 11000 [ab] | 8800 [a] | 2800 [a] | 3100 [a] | 21000 [ab] | 27000 [ab] | 40000 [ab] | 2900 [a] | 8700 [a] |
| Xylenes | ug/Kg | 5600 | 150000 | 150000 | – | – | – | – | – | ND(150) | – | – | – | ND(150) | ND(100) | ND(110) | ND(470) | ND(390) | ND(49) | ND(110) | ND(120) | ND(110) | ND(400) |

| Location Name | | Res/Comm. I Drinking Water Protection Criteria | Res/Comm. I Soil Volatilization To Indoor Air Criteria | Res/Comm. I Direct Contact Criteria | GP-5 | GP-5 | GP-6 | GP-6 | GP-7 | GP-8 | GP-9 | GP-9 | GP-9 | GP-10 | GP-10 | GP-11 | GP-11 | GP-12 | GP-12 | GP-13 | GP-13 | GP-14 | GP-14 |
|---|---|---|---|---|---|---|---|---|---|---|---|---|---|---|---|---|---|---|---|---|---|---|---|
| Sample Name | | | | | GP-5 | GP-5 | GP-6 | GP-6 | GP-7(b) | GP-8 | GP-9 | M-103 | GP-9 | GP-10 | GP-10 | GP-11 | GP-11 | GP-12 | GP-12 | GP-13 | GP-13 | GP-14 | GP-14 |
| Sample Date | | | | | 7/15/2002 | 7/16/2002 | 7/16/2002 | 7/16/2002 | 7/17/2002 | 7/17/2002 | 7/18/2002 | 7/18/2002 | 7/18/2002 | 7/18/2002 | 7/18/2002 | 7/18/2002 | 7/18/2002 | 7/18/2002 | 7/18/2002 | 7/18/2002 | 7/18/2002 | 7/19/2002 | 7/19/2002 |
| Depth | Units | a | b | c | 12-13 ft BGS | 4-5 ft BGS | 11-12 ft BGS | 12-13 ft BGS | 5-10 ft BGS | 11-12 ft BGS | 12-13 ft BGS | 12-13 ft BGS | 14-15 ft BGS | 9-10 ft BGS | 12-13 ft BGS | 9-10 ft BGS | 11-12 ft BGS | 9-10 ft BGS | 11-12 ft BGS | 9-10 ft BGS | 11-12 ft BGS | 9-10 ft BGS | 15-16 ft BGS |
| ***Metals*** | | | | | | | | | | | | | | | | | | | | | | | |
| Arsenic | ug/kg | 4600 | – | 7600 | – | – | – | – | – | – | – | – | – | – | – | – | – | – | – | – | – | – | – |
| ***Volatile Organic Compounds*** | | | | | | | | | | | | | | | | | | | | | | | |
| 1,2,4-Trimethylbenzene | ug/Kg | 2100 | 110000 | 110000 | ND(1100) | ND(110) | ND(520) | ND(540) | ND(51) | ND(52) | ND(530) | ND(54) | ND(520) | ND(52) | ND(520) | ND(72) | ND(55) | ND(52) | ND(55) | ND(52) | ND(88) | ND(54) | ND(54) |
| 1,3,5-Trimethylbenzene | ug/Kg | 1800 | 94000 | 94000 | ND(1100) | ND(110) | ND(520) | ND(540) | ND(51) | ND(52) | ND(530) | ND(54) | ND(520) | ND(52) | ND(520) | ND(72) | ND(55) | ND(52) | ND(55) | ND(52) | ND(88) | ND(54) | ND(54) |
| Naphthalene | ug/Kg | 35000 | 250000 | 16000000 | ND(5400) | ND(550) | ND(2600) | ND(2700) | ND(260) | ND(260) | ND(2600) | ND(250) | ND(2600) | ND(260) | ND(2600) | ND(360) | ND(280) | ND(260) | ND(280) | ND(260) | ND(440) | ND(270) | ND(270) |
| Ethylbenzene | ug/Kg | 1500 | 87000 | 140000 | ND(1100) | ND(110) | ND(520) | ND(540) | ND(51) | ND(52) | ND(530) | ND(54) | ND(520) | ND(52) | ND(520) | ND(72) | ND(55) | ND(52) | ND(55) | ND(52) | ND(88) | ND(54) | ND(54) |
| Tetrachloroethene (PCE) | ug/kg | 100 | 11000 | 88000 | 46000 [ab] | 8700 [a] | 26000 [ab] | 140,000 [abc] | 160 [a] | 380 [a] | 25000 [ab] | 17000 [ab] | 22000 [ab] | 2500 [a] | 13000 [ab] | 1700 [a] | 5600 [a] | 1800 [a] | 1900 [a] | 3200 [a] | 5800 [a] | 720 [a] | 2400 [a] |
| Xylenes | ug/Kg | 5600 | 150000 | 150000 | ND(2200) | ND(220) | ND(1000) | ND(1100) | ND(100) | ND(100) | ND(1100) | ND(110) | ND(1000) | ND(100) | ND(1000) | ND(140) | ND(110) | ND(100) | ND(110) | ND(100) | ND(180) | ND(110) | ND(110) |

Notes:
J – The associated value is qualified as an estimated quantity.
BJ - Method Blank Contamination. The associated value is qualified as an estimated quantity.
ND ( ) – Not detected above the value in parenthesis.
Boxed Value indicates exceedence of at least One Part 201 criteria, referenced by column
Dashed Line - No applicable criteria or not analyzed

TABLE 1

BROADWAY VILLAGE AT LOWERTOWN
SOIL ANALYTICAL RESULTS

| Location Name | | Res/Comm. I Drinking Water Protection Criteria | Res/Comm. I Soil Volatilization To Indoor Air Criteria | Res/Comm. I Direct Contact Criteria | GP-15 | GP-15 | GP-16 | GP-16 | GP-17 | GP-17 | GP-19 | GP-19 | GP-20 | GP-20 | GP-20 | HA-1 | HA-3 |
|---|---|---|---|---|---|---|---|---|---|---|---|---|---|---|---|---|---|
| Sample Name | | | | | GP-15 | GP-15 | GP-16 | GP-16 | GP-17 | GP-17 | GP-19 | GP-19 | GP-20 | GP-20 | M-104 | HA-1 | HA-3 |
| Sample Date | | | | | 7/19/2002 | 7/19/2002 | 7/19/2002 | 7/19/2002 | 7/19/2002 | 7/19/2002 | 7/22/2002 | 7/22/2002 | 7/23/2002 | 7/23/2002 | 7/23/2002 | 11/20/2001 | 11/20/2001 |
| Depth | | | | | 9-10 ft BGS | 12-13 ft BGS | 9-10 ft BGS | 10-15 ft BGS | 9-10 ft BGS | 10-11 ft BGS | 9-10 ft BGS | 10-11 ft BGS | 8-9 ft BGS | 9-10 ft BGS | 9-10 ft BGS | 1- ft | 3- ft |
| | Units | a | b | c | | | | | | | | | | | | | |
| *Metals* | | | | | | | | | | | | | | | | | |
| Arsenic | ug/kg | 4600 | -- | 7600 | -- | -- | -- | -- | -- | -- | -- | -- | -- | -- | -- | -- | 6000 A |
| *Volatile Organic Compounds* | | | | | | | | | | | | | | | | | |
| 1,2,4-Trimethylbenzene | ug/Kg | 2100 | 110000 | 110000 | ND(60) | ND(57) | ND(54) | ND(57) | ND(52) | ND(54) | ND(54) | ND(60) | ND(53) | ND(52) | ND(51) | ND(100) | ND(100) |
| 1,3,5-Trimethylbenzene | ug/Kg | 1800 | 94000 | 94000 | ND(60) | ND(57) | ND(54) | ND(57) | ND(52) | ND(54) | ND(54) | ND(60) | ND(53) | ND(52) | ND(51) | ND(100) | ND(100) |
| Naphthalene | ug/Kg | 35000 | 250000 | 16000000 | ND(300) | ND(280) | ND(270) | ND(280) | ND(260) | ND(270) | ND(270) | ND(300) | ND(260) | ND(250) | ND(250) | ND(250) | ND(250) |
| Ethylbenzene | ug/Kg | 1500 | 87000 | 140000 | ND(60) | ND(57) | ND(54) | ND(57) | ND(52) | ND(54) | ND(54) | ND(60) | ND(53) | ND(52) | ND(51) | ND(50) | ND(50) |
| Tetrachloroethene (PCE) | ug/kg | 100 | 11000 | 88000 | 1400 A | 750 A | 1000 A | 3600 A | 2000 A | 2300 A | 2600 A | 1100 A | 2500 A | 2600 A | 3100 A | 260 A | ND(50) |
| Xylenes | ug/Kg | 5600 | 150000 | 150000 | ND(120) | ND(110) | ND(110) | ND(110) | ND(100) | ND(110) | ND(110) | ND(120) | ND(110) | ND(100) | ND(100) | ND(150) | ND(150) |

| Location Name | | Res/Comm. I Drinking Water Protection Criteria | Res/Comm. I Soil Volatilization To Indoor Air Criteria | Res/Comm. I Direct Contact Criteria | SB-1 | SB-2 | SB-4 | SB-6 | SB-7 | SB-8 | SB-8 | SB-9 | SB-10 | SB-11 | SB-12 | SB-14 |
|---|---|---|---|---|---|---|---|---|---|---|---|---|---|---|---|---|
| Sample Name | | | | | AHI-SB-1-2-4 | AHI-SB-2-11.5 | AHI-SB-4-9 | AHI-SB-6-4 | AHI-SB-7-12 | AHI-SB-8-12 | AHI-SB-8-24 | AHI-SB-9-12 | AHI-SB-10-12 | AHI-SB-11-12 | AHI-SB12-3 | AHI-SB-14-8 |
| Sample Date | | | | | 11/20/2001 | 11/20/2001 | 11/20/2001 | 11/20/2001 | 11/20/2001 | 11/20/2001 | 11/20/2001 | 11/20/2001 | 11/20/2001 | 11/20/2001 | 11/20/2001 | 11/20/2001 |
| Depth | | | | | 2-4 ft BGS | 11.5- ft BGS | 9- ft BGS | 4- ft | 12- ft BGS | 12- ft BGS | 24-24 ft BGS | 12- ft BGS | 12- ft BGS | 12- ft BGS | 3- ft | 8- ft |
| | Units | a | b | c | | | | | | | | | | | | |
| *Metals* | | | | | | | | | | | | | | | | |
| Arsenic | ug/kg | 4600 | -- | 7600 | -- | -- | -- | -- | -- | -- | -- | -- | -- | -- | ND(100) | -- |
| *Volatile Organic Compounds* | | | | | | | | | | | | | | | | |
| 1,2,4-Trimethylbenzene | ug/Kg | 2100 | 110000 | 110000 | 268000 abc | ND(100) | ND(100) | 630 | ND(100) | ND(100) | ND(100) | ND(100) | ND(100) | ND(100) | ND(100) | ND(100) |
| 1,3,5-Trimethylbenzene | ug/Kg | 1800 | 94000 | 94000 | 30400 a | ND(100) | ND(100) | 140 | ND(100) | ND(100) | ND(100) | ND(100) | ND(100) | ND(100) | ND(100) | ND(100) |
| Naphthalene | ug/Kg | 35000 | 250000 | 16000000 | 52,400 a | ND(250) | ND(250) | ND(250) | ND(250) | ND(250) | ND(250) | ND(250) | ND(250) | ND(250) | ND(250) | ND(250) |
| Ethylbenzene | ug/Kg | 1500 | 87000 | 140000 | 46500 a | ND(50) | ND(50) | ND(50) | ND(50) | ND(50) | ND(50) | ND(50) | ND(50) | ND(50) | ND(50) | ND(50) |
| Tetrachloroethene (PCE) | ug/kg | 100 | 11000 | 88000 | -- | -- | -- | -- | 6840 A | 163000 abc | 1320 a | 76300 ab | 30700 ab | 4200 a | ND(50) | 9230 a |
| Xylenes | ug/Kg | 5600 | 150000 | 150000 | 208000 abc | ND(150) | ND(150) | ND(150) | ND(150) | ND(150) | ND(150) | ND(150) | ND(150) | ND(150) | ND(150) | ND(150) |

| Location Name | | Res/Comm. I Drinking Water Protection Criteria | Res/Comm. I Soil Volatilization To Indoor Air Criteria | Res/Comm. I Direct Contact Criteria | TW-1 | TW-1 | TW304-06 | TW308-06 | TW308-06 | TW313-07 | TW314-07 | TW314-07 | TW315-07 | TW315-07 | VAS-1 | VAS-1 | VAS-2 |
|---|---|---|---|---|---|---|---|---|---|---|---|---|---|---|---|---|---|
| Sample Name | | | | | TW-1 | TW-1 | S-35951-080306-NRS-077 | S-35951-080206-NRS-068 | S-35951-080206-NRS-069 | S-35951-021407-NRS-0484 | S-35951-021407-NRS-0480 | S-35951-021407-NRS-0481 | S-35951-021407-NRS-0477 | S-35951-021407-NRS-0478 | VAS-1 | VAS-1 | VAS-2 |
| Sample Date | | | | | 7/8/2002 | 7/8/2002 | 8/3/2006 | 8/2/2006 | 8/2/2006 | 2/14/2007 | 2/14/2007 | 2/14/2007 | 2/14/2007 | 2/14/2007 | 7/10/2002 | 7/10/2002 | 7/10/2002 |
| Depth | | | | | 13-14 ft BGS | 14-15 ft BGS | 2-4 ft BGS | 6-7 ft BGS | 6-7 ft BGS | 4-6 ft BGS | 7-9 ft BGS | 7-9 ft BGS | 2-4 ft BGS | 8-10 ft BGS | 10-11 ft BGS | 11-12 ft BGS | 10-11 ft BGS |
| | Units | a | b | c | | | | | | | | | | | | | |
| *Metals* | | | | | | | | | | | | | | | | | |
| Arsenic | ug/kg | 4600 | -- | 7600 | -- | -- | -- | -- | -- | -- | -- | -- | -- | -- | -- | -- | -- |
| *Volatile Organic Compounds* | | | | | | | | | | | | | | | | | |
| 1,2,4-Trimethylbenzene | ug/Kg | 2100 | 110000 | 110000 | ND(63) | ND(71) | -- | -- | -- | -- | -- | -- | -- | -- | ND(52) | ND(54) | ND(54) |
| 1,3,5-Trimethylbenzene | ug/Kg | 1800 | 94000 | 94000 | ND(63) | ND(71) | -- | -- | -- | -- | -- | -- | -- | -- | ND(52) | ND(54) | ND(54) |
| Naphthalene | ug/Kg | 35000 | 250000 | 16000000 | ND(320) | ND(360) | -- | -- | -- | -- | -- | -- | -- | -- | ND(270) | ND(270) | ND(270) |
| Ethylbenzene | ug/Kg | 1500 | 87000 | 140000 | ND(63) | ND(71) | ND(45) | ND(46) | ND(45) | ND(41) | ND(38) | ND(39) | ND(42) | ND(42) | ND(52) | ND(54) | ND(54) |
| Tetrachloroethene (PCE) | ug/kg | 100 | 11000 | 88000 | 2200 A | 5000 A | 160 J A | 1300 A | 890 A | 110 A | 2500 a | 3200 a | 240 a | 540 a | 4100 A | 2100 a | 93000 abc |
| Xylenes | ug/Kg | 5600 | 150000 | 150000 | ND(130) | ND(140) | ND(130) | ND(140) | ND(130) | ND(120) | ND(110) | ND(120) | ND(130) | ND(130) | ND(100) | ND(110) | ND(110) |

Notes:
J – The associated value is qualified as an estimated quantity.
BJ - Method Blank Contamination. The associated value is qualified as an estimated quantity.
ND ( ) – Not detected above the value in parenthesis.
Boxed Value indicates exceedence of at least One Part 201 criteria, referenced by column
Dashed Line - No applicable criteria or not analyzed

TABLE 1

BROADWAY VILLAGE AT LOWERTOWN
SOIL ANALYTICAL RESULTS

| Location Name | | Res/Comm. I Drinking Water Protection Criteria | Res/Comm. I Soil Volatilization To Indoor Air Criteria | Res/Comm. I Direct Contact Criteria | VAS-2 | VAS-2 | MW202D-05 | MW202D-05 | SB212-05 | SB212-05 | SB213-05 | SB213-05 | SB214-05 | SB215-05 | SB215-05 | SB216-05 | SB216-05 |
|---|---|---|---|---|---|---|---|---|---|---|---|---|---|---|---|---|---|
| Sample Name | | | | | M-100 | VAS-2 | S-35951-010604-BF-039 | S-35951-010604-BF-040 | S-35951-010504-BF-015 | S-35951-010504-BF-016 | S-35951-010504-BF-017 | S-35951-010504-BF-018 | S-35951-010504-BF-038 | S-35951-010504-BF-035 | S-35951-010504-BF-036 | S-35951-010504-BF-019 | S-35951-010504-BF-020 |
| Sample Date | | | | | 7/10/2002 | 7/10/2002 | 1/6/2005 | 1/6/2005 | 1/5/2005 | 1/5/2005 | 1/5/2005 | 1/5/2005 | 1/5/2005 | 1/5/2005 | 1/5/2005 | 1/5/2005 | 1/5/2005 |
| Depth | | | | | 11-12 ft BGS | 11-12 ft BGS | 3-5 ft BGS | 8-10 ft BGS | 4-6 ft BGS | 6-8 ft BGS | 4-6 ft BGS | 6-8 ft BGS | 10-12 ft BGS | 4-6 ft BGS | 8-10 ft BGS | 4-6 ft BGS | 6-8 ft BGS |
| | Units | a | b | c | | | | | | | | | | | | | |
| *Metals* | | | | | | | | | | | | | | | | | |
| Arsenic | ug/kg | 4600 | -- | 7600 | -- | -- | | | | | | | | | | | |
| *Volatile Organic Compounds* | | | | | | | | | | | | | | | | | |
| 1,2,4-Trimethylbenzene | ug/Kg | 2100 | 110000 | 110000 | ND(54) | ND(53) | ND(280) | ND(280) | ND(330) | ND(310) | ND(4600) | ND(2800) | ND(2000) | ND(270) | ND(820) | ND(3000) | ND(5200) |
| 1,3,5-Trimethylbenzene | ug/Kg | 1800 | 94000 | 94000 | ND(54) | ND(53) | -- | -- | -- | -- | -- | -- | -- | -- | -- | -- | -- |
| Naphthalene | ug/Kg | 35000 | 250000 | 16000000 | ND(270) | ND(270) | -- | -- | -- | -- | -- | -- | -- | -- | -- | -- | -- |
| Ethylbenzene | ug/Kg | 1500 | 87000 | 140000 | ND(54) | ND(53) | ND(56) | ND(55) | ND(65) | ND(61) | ND(920) | ND(560) | 110 J | ND(54) | ND(160) | ND(600) | ND(1000) |
| Tetrachloroethene (PCE) | ug/kg | 100 | 11000 | 88000 | 420000 ABC | 240000 ABC | 730A | 590A | 1000A | 980A | 35000AB | 24000AB | 11000A | 2000A | 5100A | 25000AB | 40000AB |
| Xylenes | ug/Kg | 5600 | 150000 | 150000 | ND(110) | ND(110) | 45 J | ND(550) | ND(650) | 48 J | ND(9200) | ND(5600) | 630 J | 40 J | ND(1600) | ND(6000) | ND(10000) |

| Location Name | | Res/Comm. I Drinking Water Protection Criteria | Res/Comm. I Soil Volatilization To Indoor Air Criteria | Res/Comm. I Direct Contact Criteria | SB217-05 | SB217-05 | SB218-05 | SB218-05 | SB219-05 | SB219-05 | SB220-05 | SB220-05 | SB222-05 | SB222-05 | SB223-5 | SB223-5 | SB224-05 |
|---|---|---|---|---|---|---|---|---|---|---|---|---|---|---|---|---|---|
| Sample Name | | | | | S-35951-010504-BF-013 | S-35951-010504-BF-014 | S-35951-010504-BF-011 | S-35951-010504-BF-012 | S-35951-010504-BF-021 | S-35951-010504-BF-022 | S-35951-010504-BF-033 | S-35951-010504-BF-034 | S-35951-010504-BF-023 | S-35951-010504-BF-024 | S-35951-010504-BF-009 | S-35951-010504-BF-010 | S-35951-010504-BF-025 |
| Sample Date | | | | | 1/5/2005 | 1/5/2005 | 1/5/2005 | 1/5/2005 | 1/5/2005 | 1/5/2005 | 1/5/2005 | 1/5/2005 | 1/5/2005 | 1/5/2005 | 1/5/2005 | 1/5/2005 | 1/5/2005 |
| Depth | | | | | 2-4 ft BGS | 10-12 ft BGS | 4-6 ft BGS | 8-10 ft BGS | 4-6 ft BGS | 10-12 ft BGS | 2-4 ft BGS | 6-8 ft BGS | 4-6 ft BGS | 6-8 ft BGS | 4-6 ft BGS | 6-8 ft BGS | 4-6 ft BGS |
| | Units | a | b | c | | | | | | | | | | | | | |
| *Metals* | | | | | | | | | | | | | | | | | |
| Arsenic | ug/kg | 4600 | -- | 7600 | | | | | | | | | | | | | |
| *Volatile Organic Compounds* | | | | | | | | | | | | | | | | | |
| 1,2,4-Trimethylbenzene | ug/Kg | 2100 | 110000 | 110000 | ND(1200) | ND(1200) | ND(310) | ND(320) | ND(1200) | ND(1400) | ND(300) | ND(360) | ND(320) | ND(300) | ND(290) | ND(350) | ND(280) |
| 1,3,5-Trimethylbenzene | ug/Kg | 1800 | 94000 | 94000 | -- | -- | -- | -- | -- | -- | -- | -- | -- | -- | -- | -- | -- |
| Naphthalene | ug/Kg | 35000 | 250000 | 16000000 | -- | -- | -- | -- | -- | -- | -- | -- | -- | -- | -- | -- | -- |
| Ethylbenzene | ug/Kg | 1500 | 87000 | 140000 | ND(240) | ND(240) | 72 | ND(65) | ND(230) | ND(280) | ND(61) | ND(72) | ND(65) | ND(61) | ND(57) | 880 | ND(57) |
| Tetrachloroethene (PCE) | ug/kg | 100 | 11000 | 88000 | 6200# | 7500# | 2700# | 770# | 8600# | 12000#3 | 72 | 430# | 900# | 1600# | 560a | 450# | 120# |
| Xylenes | ug/Kg | 5600 | 150000 | 150000 | ND(2400) | ND(2400) | 310 J | ND(650) | ND(2300) | 220 J | ND(610) | ND(720) | ND(650) | ND(610) | ND(570) | 3800 | ND(570) |

| Location Name | | Res/Comm. I Drinking Water Protection Criteria | Res/Comm. I Soil Volatilization To Indoor Air Criteria | Res/Comm. I Direct Contact Criteria | SB224-05 | SB225-05 | SB225-05 |
|---|---|---|---|---|---|---|---|
| Sample Name | | | | | S-35951-010504-BF-026 | S-35951-010504-BF-027 | S-35951-010504-BF-028 |
| Sample Date | | | | | 1/5/2005 | 1/5/2005 | 1/5/2005 |
| Depth | | | | | 8-10 ft BGS | 4-6 ft BGS | 6-8 ft BGS |
| | Units | a | b | c | | | |
| *Metals* | | | | | | | |
| Arsenic | ug/kg | 4600 | -- | 7600 | | | |
| *Volatile Organic Compounds* | | | | | | | |
| 1,2,4-Trimethylbenzene | ug/Kg | 2100 | 110000 | 110000 | ND(280) | ND(310) | ND(320) |
| 1,3,5-Trimethylbenzene | ug/Kg | 1800 | 94000 | 94000 | -- | -- | -- |
| Naphthalene | ug/Kg | 35000 | 250000 | 16000000 | -- | -- | -- |
| Ethylbenzene | ug/Kg | 1500 | 87000 | 140000 | ND(56) | ND(61) | ND(64) |
| Tetrachloroethene (PCE) | ug/kg | 100 | 11000 | 88000 | 100 | 580# | 1200# |
| Xylenes | ug/Kg | 5600 | 150000 | 150000 | ND(560) | ND(610) | ND(640) |

Notes:
J - The associated value is qualified as an estimated quantity.
BJ - Method Blank Contamination. The associated value is qualified as an estimated quantity.
ND ( ) - Not detected above the value in parenthesis.
Boxed Value indicates exceedence of at least One Part 201 criteria, referenced by column
Dashed Line - No applicable criteria or not analyzed

TABLE 2

BROADWAY VILLAGE AT LOWERTOWN
GROUNDWATER ANALYTICAL RESULTS - VOCs

| Sample Location: | | Res/Comm. I Drinking Water Protection Criteria | Res/Comm. I Soil Volatilization To Indoor Air Criteria | Res/Comm. I Direct Contact Criteria | MW-15 | MW-15 | MW-16 | MW107 | MW107 | MW110 | MW201S-05 | MW202D-05 | MW202D-05 | MW202S-05 | MW203I-05 | MW203S-05 | MW204D-05 |
|---|---|---|---|---|---|---|---|---|---|---|---|---|---|---|---|---|---|
| Sample ID: | | | | | GW-35951-082307-JY-045 | GW-35951-082307-JY-046 | GW-35951-082307-JY-047 | GW-35951-082307-JY-041 | GW-35951-082307-JY-042 | GW-35951-082307-NRS-033 | GW-35951-082107-EV-016 | GW-35951-082107-EV-013 | GW-35951-082107-EV-014 | GW-35951-082107-EV-012 | WG-35951-082007-EV-006 | GW-35951-082107-EV-010 | GW-35951-082107-JY-019 |
| Sample Date: | | | | | 8/23/2007 | 8/23/2007 | 8/23/2007 | 8/23/2007 | 8/23/2007 | 8/23/2007 | 8/21/2007 | 8/21/2007 | 8/21/2007 | 8/21/2007 | 8/20/2007 | 8/21/2007 | 8/21/2007 |
| Sample Type: | | | | | | Duplicate | | | Duplicate | | | | Duplicate | | | | |
| Parameters | Units | a | b | c | | | | | | | | | | | | | |
| Volatile Organic Compounds | | | | | | | | | | | | | | | | | |
| 1,1,1-Trichloroethane | ug/L | 200 | 660000 | 1300000 | ND(1.0) | ND(1.0) | ND(1.0) | 0.22 J | ND(1.0) | ND(1.0) | ND(1.7) | ND(1.0) | ND(1.0) | ND(22) | ND(3300) | ND(6200) | ND(1.0) |
| 1,1,2,2-Tetrachloroethane | ug/L | 8.5 | 12000 | 4700 | ND(1.0)UJ | ND(1.0)UJ | ND(1.0)UJ | ND(1.0)UJ | ND(1.0)UJ | ND(1.0)UJ | ND(1.7) | ND(1.0) | ND(1.0) | ND(22) | ND(3300)UJ | ND(6200) | ND(1.0) |
| 1,1,2-Trichloroethane | ug/L | 5 | 17000 | 21000 | ND(1.0) | ND(1.0) | ND(1.0) | ND(1.0) | ND(1.0) | ND(1.0) | ND(1.7) | ND(1.0) | ND(1.0) | ND(22) | ND(3300) | ND(6200) | ND(1.0) |
| 1,1-Dichloroethane | ug/L | 880 | 1000000 | 2400000 | ND(1.0) | ND(1.0) | ND(1.0) | ND(1.0) | ND(1.0) | ND(1.0) | ND(1.7) | ND(1.0) | ND(1.0) | ND(22) | ND(3300) | ND(6200) | ND(1.0) |
| 1,1-Dichloroethene | ug/L | 7 | 200 | 11000 | ND(1.0) | ND(1.0) | ND(1.0) | ND(1.0) | ND(1.0) | ND(1.0) | ND(1.7) | ND(1.0) | ND(1.0) | ND(22) | ND(3300) | ND(6200) | ND(1.0) |
| 1,2,4-Trichlorobenzene | ug/L | 70 | 300000 | 19000 | ND(5.0) | ND(5.0) | ND(5.0) | ND(5.0) | ND(5.0) | ND(5.0) | ND(8.4) | ND(5.0) | ND(5.0) | ND(110) | ND(17000) | ND(31000) | ND(5.0) |
| 1,2-Dibromo-3-chloropropane (DBCP) | ug/L | 0.2 | 1200 | 390 | ND(1.0) | ND(1.0) | ND(1.0) | ND(1.0) | ND(1.0) | ND(1.0) | ND(1.7) | ND(1.0) | ND(1.0) | ND(22) | ND(3300) | ND(6200) | ND(1.0) |
| 1,2-Dibromoethane (Ethylene Dibromide) | ug/L | 0.05 | 2400 | 25 | ND(1.0) | ND(1.0) | ND(1.0) | ND(1.0) | ND(1.0) | ND(1.0) | ND(1.7) | ND(1.0) | ND(1.0) | ND(22) | ND(3300) | ND(6200) | ND(1.0) |
| 1,2-Dichlorobenzene | ug/L | 600 | 160000 | 160000 | ND(1.0) | ND(1.0) | ND(1.0) | ND(1.0) | ND(1.0) | ND(1.0) | ND(1.7) | ND(1.0) | ND(1.0) | ND(22) | ND(3300) | ND(6200) | ND(1.0) |
| 1,2-Dichloroethane | ug/L | 5 | 9600 | 19000 | ND(1.0) | ND(1.0) | ND(1.0) | ND(1.0) | ND(1.0) | ND(1.0) | ND(1.7) | ND(1.0) | ND(1.0) | ND(22) | ND(3300) | ND(6200) | ND(1.0) |
| 1,2-Dichloropropane | ug/L | 5 | 16000 | 16000 | ND(1.0) | ND(1.0) | ND(1.0) | ND(1.0) | ND(1.0) | ND(1.0) | ND(1.7) | ND(1.0) | ND(1.0) | ND(22) | ND(3300) | ND(6200) | ND(1.0) |
| 1,3-Dichlorobenzene | ug/L | 6.6 | -- | 2000 | ND(1.0) | ND(1.0) | ND(1.0) | ND(1.0) | ND(1.0) | ND(1.0) | ND(1.7) | ND(1.0) | ND(1.0) | ND(22) | ND(3300) | ND(6200) | ND(1.0) |
| 1,4-Dichlorobenzene | ug/L | 75 | 16000 | 6400 | ND(1.0) | ND(1.0) | ND(1.0) | ND(1.0) | ND(1.0) | ND(1.0) | ND(1.7) | ND(1.0) | ND(1.0) | ND(22) | ND(3300) | ND(6200) | ND(1.0) |
| 2-Butanone (Methyl Ethyl Ketone) | ug/L | 13000 | 240000000 | 240000000 | ND(25) | ND(25) | ND(25) | ND(25) | ND(25) | ND(25) | ND(42) | ND(25) | ND(25) | ND(560) | ND(83000) | ND(160000) | ND(25) |
| 2-Hexanone | ug/L | 1000 | 4200000 | 5200000 | ND(50) | ND(50) | ND(50) | ND(50) | ND(50) | ND(50) | ND(84) | ND(50) | ND(50) | ND(1100) | ND(170000) | ND(310000) | ND(50) |
| 4-Methyl-2-Pentanone (Methyl Isobutyl Ketone) | ug/L | 1800 | 20000000 | 13000000 | ND(50) | ND(50) | ND(50) | ND(50) | ND(50) | ND(50) | ND(84) | ND(50) | ND(50) | ND(1100) | ND(170000) | ND(310000) | ND(50) |
| Acetone | ug/L | 730 | 1000000000 | 31000000 | ND(25) | ND(25) | ND(25) | ND(25) | ND(25) | ND(25)U | ND(42)U | ND(25) | ND(25) | ND(560)U | ND(83000)U | ND(160000)U | ND(25) |
| Benzene | ug/L | 5 | 5600 | 11000 | ND(1.0) | ND(1.0) | ND(1.0) | ND(1.0) | ND(1.0) | ND(1.0) | ND(1.7) | ND(1.0) | ND(1.0) | ND(22) | ND(3300) | ND(6200) | ND(1.0) |
| Bromodichloromethane | ug/L | 80 | 4800 | 14000 | ND(1.0) | ND(1.0) | ND(1.0) | ND(1.0) | ND(1.0) | ND(1.0) | ND(1.7) | ND(1.0) | ND(1.0) | ND(22) | ND(3300) | ND(6200) | ND(1.0) |
| Bromoform | ug/L | 80 | 470000 | 140000 | ND(1.0) | ND(1.0) | ND(1.0) | ND(1.0) | ND(1.0) | ND(1.0) | ND(1.7) | ND(1.0) | ND(1.0) | ND(22) | ND(3300) | ND(6200) | ND(1.0) |
| Bromomethane (Methyl Bromide) | ug/L | 10 | 4000 | 70000 | ND(1.0) | ND(1.0) | ND(1.0) | ND(1.0) | ND(1.0) | ND(1.0) | ND(1.7) | ND(1.0) | ND(1.0) | ND(22) | ND(3300) | ND(6200) | ND(1.0) |
| Carbon disulfide | ug/L | 800 | 250000 | 1200000 | ND(5.0) | ND(5.0) | ND(5.0) | ND(5.0) | ND(5.0) | ND(5.0) | ND(8.4) | ND(5.0) | ND(5.0) | ND(110) | ND(17000) | ND(31000) | ND(5.0) |
| Carbon tetrachloride | ug/L | 5 | 370 | 4600 | ND(1.0) | ND(1.0) | ND(1.0) | ND(1.0) | ND(1.0) | ND(1.0) | ND(1.7) | ND(1.0) | ND(1.0) | ND(22) | ND(3300) | ND(6200) | ND(1.0) |
| Chlorobenzene | ug/L | 100 | 210000 | 86000 | ND(1.0) | ND(1.0) | ND(1.0) | ND(1.0) | ND(1.0) | ND(1.0) | ND(1.7) | ND(1.0) | ND(1.0) | ND(22) | ND(3300) | ND(6200) | ND(1.0) |
| Chloroethane | ug/L | 430 | 5700000 | 440000 | ND(1.0) | ND(1.0) | ND(1.0) | ND(1.0) | ND(1.0) | ND(1.0) | ND(1.7) | ND(1.0) | ND(1.0) | ND(22) | ND(3300) | ND(6200) | ND(1.0) |
| Chloroform (Trichloromethane) | ug/L | 80 | 28000 | 150000 | ND(1.0) | ND(1.0) | ND(1.0) | ND(1.0) | ND(1.0) | ND(1.0) | ND(1.7) | ND(1.0) | ND(1.0) | ND(22) | ND(3300) | ND(6200) | ND(1.0) |
| Chloromethane (Methyl Chloride) | ug/L | 260 | 8600 | 490000 | ND(1.0) | ND(1.0) | ND(1.0) | ND(1.0) | ND(1.0) | ND(1.0) | ND(1.7) | ND(1.0) | ND(1.0) | ND(22) | ND(3300) | ND(6200) | ND(1.0) |
| cis-1,2-Dichloroethene | ug/L | 70 | 93000 | 200000 | ND(1.0) | ND(1.0) | ND(1.0) | ND(1.0) | ND(1.0) | ND(1.0) | ND(1.7) | 0.46 J | 0.61 J | ND(22) | ND(3360) | ND(6200) | 2.2 |
| cis-1,3-Dichloropropene | ug/L | -- | -- | -- | ND(1.0) | ND(1.0) | ND(1.0) | ND(1.0) | ND(1.0) | ND(1.0) | ND(1.7) | ND(1.0) | ND(1.0) | ND(22) | ND(3300) | ND(6200) | ND(1.0) |
| Cyclohexane | ug/L | -- | -- | -- | ND(1.0) | ND(1.0) | ND(1.0) | ND(1.0) | ND(1.0) | ND(1.0) | ND(1.7) | ND(1.0) | ND(1.0) | ND(22) | ND(3300) | ND(6200) | ND(1.0) |
| Dibromochloromethane | ug/L | 80 | 14000 | 18000 | ND(1.0) | ND(1.0) | ND(1.0) | ND(1.0) | ND(1.0) | ND(1.0) | ND(1.7) | ND(1.0) | ND(1.0) | ND(22) | ND(3300) | ND(6200) | ND(1.0) |
| Dichlorodifluoromethane (CFC-12) | ug/L | 1700 | 220000 | 300000 | ND(1.0) | ND(1.0) | ND(1.0) | ND(1.0) | ND(1.0) | ND(1.0) | ND(1.7)UJ | ND(1.0)UJ | ND(1.0)UJ | ND(22)UJ | ND(3300) | ND(6200)UJ | ND(1.0)UJ |
| Ethylbenzene | ug/L | 74 | 110000 | 170000 | ND(1.0) | ND(1.0) | ND(1.0) | ND(1.0) | ND(1.0) | ND(1.0) | ND(1.7) | ND(1.0) | ND(1.0) | ND(22) | ND(3300) | ND(6200) | ND(1.0) |
| Isopropylbenzene | ug/L | 800 | 56000 | 56000 | ND(5.0) | ND(5.0) | ND(5.0) | ND(5.0) | ND(5.0) | ND(5.0) | ND(8.4) | ND(5.0) | ND(5.0) | ND(110) | ND(17000) | ND(31000) | ND(5.0) |
| Methyl acetate | ug/L | -- | -- | -- | ND(10) | ND(10) | ND(10) | ND(10) | ND(10) | ND(10) | ND(17) | ND(10) | ND(10) | ND(220) | ND(33000) | ND(62000) | ND(10) |
| Methyl cyclohexane | ug/L | -- | -- | -- | ND(1.0) | ND(1.0) | ND(1.0) | ND(1.0) | ND(1.0) | ND(1.0) | ND(1.7) | ND(1.0) | ND(1.0) | ND(22) | ND(3300) | ND(6200) | ND(1.0) |
| Methyl Tert Butyl Ether | ug/L | 40 | 47000000 | 610000 | 11 | 11 | ND(5.0) | ND(5.0) | ND(5.0) | ND(5.0) | ND(8.4) | 3.3 J | 3.4 J | ND(110) | ND(17000) | ND(31000) | 37 |
| Methylene chloride | ug/L | 5 | 220000 | 220000 | ND(5.0) | ND(5.0) | ND(5.0) | ND(5.0) | ND(5.0) | ND(5.0) | ND(8.4) | ND(5.0) | ND(5.0) | ND(110) | ND(17000) | ND(31000) | ND(5.0) |
| Styrene | ug/L | 100 | 170000 | 9700 | ND(1.0) | ND(1.0) | ND(1.0) | ND(1.0) | ND(1.0) | ND(1.0) | ND(1.7) | ND(1.0) | ND(1.0) | ND(22) | ND(3300) | ND(6200) | ND(1.0) |
| Tetrachloroethene | ug/L | 5 | 25000 | 12000 | 2.5 | 2.7 | 0.52 J | 39* | 40* | ND(1.0) | 41* | 2.4 | 2.6 | 520* | 98000** | 160000** | 40* |
| Toluene | ug/L | 790 | 530000 | 530000 | ND(1.0) | ND(1.0) | ND(1.0) | ND(1.0) | ND(1.0) | ND(1.0) | ND(1.7) | ND(1.0) | ND(1.0) | ND(22) | ND(3300) | ND(6200) | ND(1.0) |
| trans-1,2-Dichloroethene | ug/L | 100 | 85000 | 220000 | ND(1.0) | ND(1.0) | ND(1.0) | ND(1.0) | ND(1.0) | ND(1.0) | ND(1.7) | ND(1.0) | ND(1.0) | ND(22) | ND(3300) | ND(6200) | ND(1.0) |
| trans-1,3-Dichloropropene | ug/L | -- | -- | -- | ND(1.0) | ND(1.0) | ND(1.0) | ND(1.0) | ND(1.0) | ND(1.0) | ND(1.7) | ND(1.0) | ND(1.0) | ND(22) | ND(3300) | ND(6200) | ND(1.0) |
| Trichloroethene | ug/L | 5 | 15000 | 22000 | ND(1.0) | ND(1.0) | ND(1.0) | ND(1.0) | ND(1.0) | ND(1.0) | ND(1.7) | ND(1.0) | ND(1.0) | 42* | ND(3300) | ND(6200) | ND(1.0) |
| Trichlorofluoromethane (CFC-11) | ug/L | 2600 | 1100000 | 1100000 | ND(1.0) | ND(1.0) | ND(1.0) | ND(1.0) | ND(1.0) | ND(1.0) | ND(1.7) | ND(1.0) | ND(1.0) | ND(22) | ND(3300) | ND(6200) | ND(1.0) |
| Trifluorotrichloroethane (Freon 113) | ug/L | 170000 | 170000 | 170000 | ND(1.0) | ND(1.0) | ND(1.0) | ND(1.0) | ND(1.0) | ND(1.0) | ND(1.7) | ND(1.0) | ND(1.0) | ND(22) | ND(3300) | ND(6200) | ND(1.0) |
| Vinyl chloride | ug/L | 2 | 1100 | 1000 | ND(1.0) | ND(1.0) | ND(1.0) | ND(1.0) | ND(1.0) | ND(1.0) | ND(1.7) | ND(1.0) | ND(1.0) | ND(22)UJ | ND(3300) | ND(6200) | ND(1.0) |
| Xylene (total) | ug/L | 280 | 190000 | 190000 | ND(2.0) | ND(2.0) | ND(2.0) | ND(2.0) | ND(2.0) | ND(2.0) | ND(3.3) | ND(2.0) | ND(2.0) | ND(44) | ND(6700) | ND(12000) | ND(2.0) |

Notes:
ND() - Non detect values.
J - Estimated concentration.
UJ - Estimated reporting limit.
Criteria:
-- No criteria.

TABLE 2

BROADWAY VILLAGE AT LOWERTOWN
GROUNDWATER ANALYTICAL RESULTS - VOCs

| Sample Location: | | Res/Comm. I Drinking Water Protection Criteria | Res/Comm. I Soil Volatilization To Indoor Air Criteria | Res/Comm. I Direct Contact Criteria | MW204I-05 | MW204S-05 | MW205D-05 | MW205S-05 | MW206S-06 | MW301D-06 | MW301S-06 | MW305D-07 | MW305I-07 | MW306S-07 | MW306D-07 | MW307D-07 | MW307D-07 |
|---|---|---|---|---|---|---|---|---|---|---|---|---|---|---|---|---|---|
| Sample ID: | | | | | GW-35951-082107-JY-015 | GW-35951-082107-JY-009 | GW-35951-082307-JY-039 | GW-35951-082307-JY-040 | GW-35951-082107-JY-023 | GW-35951-082107-EV-017 | GW-35951-082307-NRS-037 | GW-35951-082107-EV-025 | GW-35951-082107-EV-024 | GW-35951-082107-EV-026 | GW-35951-082107-EV-018 | GW-35951-082307-NRS-035 | GW-35951-082307-NRS-036 |
| Sample Date: | | | | | 8/21/2007 | 8/21/2007 | 8/23/2007 | 8/23/2007 | 8/21/2007 | 8/21/2007 | 8/23/2007 | 8/21/2007 | 8/21/2007 | 8/21/2007 | 8/21/2007 | 8/23/2007 | 8/23/2007 |
| Sample Type: | | | | | | | | | | | | | | | | | Duplicate |
| Parameters | Units | a | b | c | | | | | | | | | | | | | |
| Volatile Organic Compounds | | | | | | | | | | | | | | | | | |
| 1,1,1-Trichloroethane | ug/L | 200 | 660000 | 1300000 | ND(710) | ND(3300) | ND(1.0) | ND(1.0) | ND(20) | ND(5.0) | ND(1.0) | ND(1.0) | ND(1.0) | ND(1700) | ND(1.7) | ND(1.0) | ND(1.0) |
| 1,1,2,2-Tetrachloroethane | ug/L | 8.5 | 12000 | 4700 | ND(710) | ND(3300) | ND(1.0)UJ | ND(1.0)UJ | ND(20) | ND(5.0) | ND(1.0)UJ | ND(1.0)UJ | ND(1.0) | ND(1700) | ND(1.7) | ND(1.0)UJ | ND(1.0)UJ |
| 1,1,2-Trichloroethane | ug/L | 5 | 17000 | 21000 | ND(710) | ND(3300) | ND(1.0) | ND(1.0) | ND(20) | ND(5.0) | ND(1.0) | ND(1.0) | ND(1.0) | ND(1700) | ND(1.7) | ND(1.0) | ND(1.0) |
| 1,1-Dichloroethane | ug/L | 880 | 1000000 | 2400000 | ND(710) | ND(3300) | 0.27 J | ND(1.0) | ND(20) | ND(5.0) | ND(1.0) | ND(1.0) | ND(1.0) | ND(1700) | ND(1.7) | ND(1.0) | ND(1.0) |
| 1,1-Dichloroethene | ug/L | 7 | 200 | 11000 | ND(710) | ND(3300) | ND(1.0) | ND(1.0) | ND(20) | ND(5.0) | ND(1.0) | ND(1.0) | ND(1.0) | ND(1700) | ND(1.7) | ND(1.0) | ND(1.0) |
| 1,2,4-Trichlorobenzene | ug/L | 70 | 300000 | 19000 | ND(3600) | ND(17000) | ND(5.0) | ND(5.0) | ND(100) | ND(25) | ND(5.0) | ND(5.0) | ND(5.0) | ND(8300) | ND(8.4) | ND(5.0) | ND(5.0) |
| 1,2-Dibromo-3-chloropropane (DBCP) | ug/L | 0.2 | 1200 | 390 | ND(710) | ND(3300) | ND(1.0) | ND(1.0) | ND(20) | ND(5.0) | ND(1.0) | ND(1.0) | ND(1.0) | ND(1700) | ND(1.7) | ND(1.0) | ND(1.0) |
| 1,2-Dibromoethane (Ethylene Dibromide) | ug/L | 0.05 | 2400 | 25 | ND(710) | ND(3300) | ND(1.0) | ND(1.0) | ND(20) | ND(5.0) | ND(1.0) | ND(1.0) | ND(1.0) | ND(1700) | ND(1.7) | ND(1.0) | ND(1.0) |
| 1,2-Dichlorobenzene | ug/L | 600 | 160000 | 160000 | ND(710) | ND(3300) | ND(1.0) | ND(1.0) | ND(20) | ND(5.0) | ND(1.0) | ND(1.0) | ND(1.0) | ND(1700) | ND(1.7) | ND(1.0) | ND(1.0) |
| 1,2-Dichloroethane | ug/L | 5 | 9600 | 19000 | ND(710) | ND(3300) | ND(1.0) | ND(1.0) | ND(20) | ND(5.0) | ND(1.0) | ND(1.0) | ND(1.0) | ND(1700) | ND(1.7) | ND(1.0) | ND(1.0) |
| 1,2-Dichloropropane | ug/L | 5 | 16000 | 16000 | ND(710) | ND(3300) | ND(1.0) | ND(1.0) | ND(20) | ND(5.0) | ND(1.0) | ND(1.0) | ND(1.0) | ND(1700) | ND(1.7) | ND(1.0) | ND(1.0) |
| 1,3-Dichlorobenzene | ug/L | 6.6 | -- | 2000 | ND(710) | ND(3300) | ND(1.0) | ND(1.0) | ND(20) | ND(5.0) | ND(1.0) | ND(1.0) | ND(1.0) | ND(1700) | ND(1.7) | ND(1.0) | ND(1.0) |
| 1,4-Dichlorobenzene | ug/L | 75 | 16000 | 6400 | ND(710) | ND(3300) | ND(1.0) | ND(1.0) | ND(20) | ND(5.0) | ND(1.0) | ND(1.0) | ND(1.0) | ND(1700) | ND(1.7) | ND(1.0) | ND(1.0) |
| 2-Butanone (Methyl Ethyl Ketone) | ug/L | 13000 | 240000000 | 240000000 | ND(18000) | ND(83000) | ND(25) | ND(25) | ND(500) | ND(120) | ND(25) | ND(25) | ND(25) | ND(42000) | ND(42) | ND(25) | ND(25) |
| 2-Hexanone | ug/L | 1000 | 4200000 | 5200000 | ND(36000) | ND(170000) | ND(50) | ND(50) | ND(1000) | ND(250) | ND(50) | ND(50) | ND(50) | ND(83000) | ND(84) | ND(50) | ND(50) |
| 4-Methyl-2-Pentanone (Methyl Isobutyl Ketone) | ug/L | 1800 | 20000000 | 13000000 | ND(36000) | ND(170000) | ND(50) | ND(50) | ND(1000) | ND(250) | ND(50) | ND(50) | ND(50) | ND(83000) | ND(84) | ND(50) | ND(50) |
| Acetone | ug/L | 730 | 1000000000 | 31000000 | ND(18000)U | ND(83000)U | ND(25) | ND(25) | ND(500)U | ND(120)U | ND(25)U | ND(25)U | ND(25)U | ND(42000)U | ND(42)U | ND(25)U | ND(25) |
| Benzene | ug/L | 5 | 5600 | 11000 | ND(710) | ND(3300) | ND(1.0) | ND(1.0) | ND(20) | ND(5.0) | ND(1.0) | ND(1.0) | ND(1.0) | ND(1700) | ND(1.7) | ND(1.0) | ND(1.0) |
| Bromodichloromethane | ug/L | 80 | 4800 | 14000 | ND(710) | ND(3300) | ND(1.0) | ND(1.0) | ND(20) | ND(5.0) | ND(1.0) | ND(1.0) | ND(1.0) | ND(1700) | ND(1.7) | ND(1.0) | ND(1.0) |
| Bromoform | ug/L | 80 | 470000 | 140000 | ND(710) | ND(3300) | ND(1.0) | ND(1.0) | ND(20) | ND(5.0) | ND(1.0) | ND(1.0) | ND(1.0) | ND(1700) | ND(1.7) | ND(1.0) | ND(1.0) |
| Bromomethane (Methyl Bromide) | ug/L | 10 | 4000 | 70000 | ND(710) | ND(3300) | ND(1.0) | ND(1.0) | ND(20) | ND(5.0) | ND(1.0) | ND(1.0) | ND(1.0) | ND(1700) | ND(1.7) | ND(1.0) | ND(1.0) |
| Carbon disulfide | ug/L | 800 | 250000 | 1200000 | ND(3600) | ND(17000) | ND(5.0) | ND(5.0) | ND(100) | ND(25) | ND(5.0) | ND(5.0) | ND(5.0) | ND(8300) | ND(8.4) | ND(5.0) | ND(5.0) |
| Carbon tetrachloride | ug/L | 5 | 370 | 4600 | ND(710) | ND(3300) | ND(1.0) | ND(1.0) | ND(20) | ND(5.0) | ND(1.0) | ND(1.0) | ND(1.0) | ND(1700) | ND(1.7) | ND(1.0) | ND(1.0) |
| Chlorobenzene | ug/L | 100 | 210000 | 86000 | ND(710) | ND(3300) | ND(1.0) | ND(1.0) | ND(20) | ND(5.0) | ND(1.0) | ND(1.0) | ND(1.0) | ND(1700) | ND(1.7) | ND(1.0) | ND(1.0) |
| Chloroethane | ug/L | 430 | 5700000 | 440000 | ND(710) | ND(3300) | ND(1.0) | ND(1.0) | ND(20) | ND(5.0) | ND(1.0) | ND(1.0) | ND(1.0) | ND(1700) | ND(1.7) | ND(1.0) | ND(1.0) |
| Chloroform (Trichloromethane) | ug/L | 80 | 28000 | 150000 | ND(710) | ND(3300) | ND(1.0) | ND(1.0) | ND(20) | ND(5.0) | ND(1.0) | 0.34 J | ND(1.0) | ND(1700) | 0.45 J | 0.39 J | 0.39 J |
| Chloromethane (Methyl Chloride) | ug/L | 260 | 8600 | 490000 | ND(710) | ND(3300) | ND(1.0) | ND(1.0) | ND(20) | ND(5.0) | ND(1.0) | ND(1.0) | ND(1.0) | ND(1700) | ND(1.7) | ND(1.0) | ND(1.0) |
| cis-1,2-Dichloroethene | ug/L | 70 | 93000 | 200000 | ND(710) | ND(3300) | 6.0 | ND(1.0) | ND(20) | 1.8 J | ND(1.0) | 2.5 | 4.8 | ND(1700) | ND(1.7) | ND(1.0) | ND(1.0) |
| cis-1,3-Dichloropropene | ug/L | -- | -- | -- | ND(710) | ND(3300) | ND(1.0) | ND(1.0) | ND(20) | ND(5.0) | ND(1.0) | ND(1.0) | ND(1.0) | ND(1700) | ND(1.7) | ND(1.0) | ND(1.0) |
| Cyclohexane | ug/L | -- | -- | -- | ND(710) | ND(3300) | ND(1.0) | ND(1.0) | ND(20) | ND(5.0) | ND(1.0) | ND(1.0) | ND(1.0) | ND(1700) | ND(1.7) | ND(1.0) | ND(1.0) |
| Dibromochloromethane | ug/L | 80 | 14000 | 18000 | ND(710) | ND(3300) | ND(1.0) | ND(1.0) | ND(20) | ND(5.0) | ND(1.0) | ND(1.0) | ND(1.0) | ND(1700) | ND(1.7) | ND(1.0) | ND(1.0) |
| Dichlorodifluoromethane (CFC-12) | ug/L | 1700 | 220000 | 300000 | ND(710)UJ | ND(3300)UJ | ND(1.0) | ND(1.0) | ND(20)UJ | ND(5.0)UJ | ND(1.0) | ND(1.0) | ND(1.0)UJ | ND(1700)UJ | ND(1.7)UJ | ND(1.0) | ND(1.0) |
| Ethylbenzene | ug/L | 74 | 110000 | 170000 | ND(710) | ND(3300) | ND(1.0) | ND(1.0) | ND(20) | ND(5.0) | ND(1.0) | ND(1.0) | ND(1.0) | ND(1700) | ND(1.7) | ND(1.0) | ND(1.0) |
| Isopropylbenzene | ug/L | 800 | 56000 | 56000 | ND(3600) | ND(17000) | ND(5.0) | ND(5.0) | ND(100) | ND(25) | ND(5.0) | ND(5.0) | ND(5.0) | ND(8300) | ND(8.4) | ND(5.0) | ND(5.0) |
| Methyl acetate | ug/L | -- | -- | -- | ND(7100) | ND(33000) | ND(10) | ND(10) | ND(200) | ND(50) | ND(10) | ND(10) | ND(10) | ND(17000) | ND(17) | ND(10) | ND(10) |
| Methyl cyclohexane | ug/L | -- | -- | -- | ND(710) | ND(3300) | ND(1.0) | ND(1.0) | ND(20) | ND(5.0) | ND(1.0) | ND(1.0) | ND(1.0) | ND(1700) | ND(1.7) | ND(1.0) | ND(1.0) |
| Methyl Tert Butyl Ether | ug/L | 40 | 47000000 | 610000 | ND(3600) | ND(17000) | 18 | 3.8 J | ND(100) | 120 | 3.8 J | 20 | 21 | ND(8300) | ND(8.4) | ND(5.0) | ND(5.0) |
| Methylene chloride | ug/L | 5 | 220000 | 220000 | ND(3600) | ND(17000) | ND(5.0) | ND(5.0) | ND(100) | ND(25) | ND(5.0) | ND(5.0) | ND(5.0) | ND(8300) | ND(8.4) | ND(5.0) | ND(5.0) |
| Styrene | ug/L | 100 | 170000 | 9700 | ND(710) | ND(3300) | ND(1.0) | ND(1.0) | ND(20) | ND(5.0) | ND(1.0) | ND(1.0) | ND(1.0) | ND(1700) | ND(1.7) | ND(1.0) | ND(1.0) |
| Tetrachloroethene | ug/L | 5 | 25000 | 12000 | 16000 | 96000 | ND(1.0) | 29 | 480 | 1.9 J | 37 | 0.60 J | 5.4 | 38000 | 56 | ND(1.0) | ND(1.0) |
| Toluene | ug/L | 790 | 530000 | 530000 | ND(710) | ND(3300) | ND(1.0) | ND(1.0) | ND(20) | ND(5.0) | ND(1.0) | ND(1.0) | ND(1.0) | ND(1700) | ND(1.7) | ND(1.0) | ND(1.0) |
| trans-1,2-Dichloroethene | ug/L | 100 | 85000 | 220000 | ND(710) | ND(3300) | 0.94 J | ND(1.0) | ND(20) | ND(5.0) | ND(1.0) | ND(1.0) | ND(1.0) | ND(1700) | ND(1.7) | ND(1.0) | ND(1.0) |
| trans-1,3-Dichloropropene | ug/L | -- | -- | -- | ND(710) | ND(3300) | ND(1.0) | ND(1.0) | ND(20) | ND(5.0) | ND(1.0) | ND(1.0) | ND(1.0) | ND(1700) | ND(1.7) | ND(1.0) | ND(1.0) |
| Trichloroethene | ug/L | 5 | 15000 | 22000 | ND(710) | ND(3300) | ND(1.0) | 10 | ND(20) | ND(5.0) | 1.4 | ND(1.0) | ND(1.0) | ND(1700) | ND(1.7) | ND(1.0) | ND(1.0) |
| Trichlorofluoromethane (CFC-11) | ug/L | 2600 | 1100000 | 1100000 | ND(710) | ND(3300) | ND(1.0) | ND(1.0) | ND(20) | ND(5.0) | ND(1.0) | ND(1.0) | ND(1.0) | ND(1700) | ND(1.7) | ND(1.0) | ND(1.0) |
| Trifluorotrichloroethane (Freon 113) | ug/L | 170000 | 170000 | 170000 | ND(710) | ND(3300) | ND(1.0) | ND(1.0) | ND(20) | ND(5.0) | ND(1.0) | ND(1.0) | ND(1.0) | ND(1700) | ND(1.7) | ND(1.0) | ND(1.0) |
| Vinyl chloride | ug/L | 2 | 1100 | 1000 | ND(710) | ND(3300) | ND(1.0) | ND(1.0) | ND(20) | ND(5.0) | ND(1.0) | ND(1.0) | ND(1.0) | ND(1700) | ND(1.7) | ND(1.0) | ND(1.0) |
| Xylene (total) | ug/L | 280 | 190000 | 190000 | ND(1400) | ND(6700) | ND(2.0) | ND(2.0) | ND(40) | ND(10) | ND(2.0) | ND(2.0) | ND(2.0) | ND(8300) | ND(8.3) | ND(2.0) | ND(2.0) |

Notes:
ND() - Non detect values.
J - Estimated concentration.
UJ - Estimated reporting limit.
Criteria:
-- No criteria.

TABLE 2

BROADWAY VILLAGE AT LOWERTOWN
GROUNDWATER ANALYTICAL RESULTS - VOCs

| *Sample Location:* | | Res/Comm. I Drinking Water Protection Criteria | Res/Comm. I Soil Volatilization To Indoor Air Criteria | Res/Comm. I Direct Contact Criteria | *MW307S-07* | *MW308D-07* | *MW308S-07* | *MW308S-07* | *MW309D-07* | *MW309S-07* | *MW309S-07* | *MW313D-07* | *MW313S-07* | *MW314D-07* | *MW314S-07* | *MW5* |
|---|---|---|---|---|---|---|---|---|---|---|---|---|---|---|---|---|
| *Sample ID:* | | | | | *GW-35951-082307-NRS-034* | *GW-35951-082107-JY-021* | *GW-35951-082107-JY-020* | *GW-35951-082307-NRS-050* | *GW-35951-082307-NRS-032* | *GW-35951-082307-NRS-029* | *GW-35951-082307-NRS-030* | *GW-35951-082307-NRS-031* | *GW-35951-082307-NRS-038* | *GW-35951-082307-JY-044* | *GW-35951-082307-JY-043* | *GW-35951-082107-JY-022* |
| *Sample Date:* | | | | | *8/23/2007* | *8/21/2007* | *8/21/2007* | *8/23/2007* | *8/23/2007* | *8/23/2007* | *8/23/2007* | *8/23/2007* | *8/23/2007* | *8/23/2007* | *8/23/2007* | *8/21/2007* |
| *Sample Type:* | | | | | | | | | | | *Duplicate* | | | | | |
| *Parameters* | *Units* | *a* | *b* | *c* | | | | | | | | | | | | |
| *Volatile Organic Compounds* | | | | | | | | | | | | | | | | |
| 1,1,1-Trichloroethane | ug/L | 200 | 660000 | 1300000 | ND(1.0) | 8.0 J | ND(2500) | – | 0.28 J | ND(1.0) | ND(1.0) | ND(1.0) | ND(1.0) | ND(1.0) | ND(1.0) | ND(1.0) |
| 1,1,2,2-Tetrachloroethane | ug/L | 8.5 | 12000 | 4700 | ND(1.0)UJ | ND(20) | ND(2500) | – | ND(1.0)UJ | ND(1.0)UJ | ND(1.0)UJ | ND(1.0)UJ | ND(1.0)UJ | ND(1.0)UJ | ND(1.0)UJ | ND(1.0) |
| 1,1,2-Trichloroethane | ug/L | 5 | 17000 | 21000 | ND(1.0) | ND(20) | ND(2500) | – | ND(1.0) | ND(1.0) | ND(1.0) | ND(1.0) | ND(1.0) | ND(1.0) | ND(1.0) | ND(1.0) |
| 1,1-Dichloroethane | ug/L | 880 | 1000000 | 2400000 | ND(1.0) | ND(20) | ND(2500) | – | ND(1.0) | ND(1.0) | ND(1.0) | ND(1.0) | ND(1.0) | ND(1.0) | ND(1.0) | ND(1.0) |
| 1,1-Dichloroethene | ug/L | 7 | 200 | 11000 | ND(1.0) | ND(20) | ND(2500) | – | ND(1.0) | ND(1.0) | ND(1.0) | ND(1.0) | ND(1.0) | ND(1.0) | ND(1.0) | ND(1.0) |
| 1,2,4-Trichlorobenzene | ug/L | 70 | 300000 | 19000 | ND(5.0) | ND(100) | ND(12000) | – | ND(5.0) | ND(5.0) | ND(5.0) | ND(5.0) | ND(5.0) | ND(5.0) | ND(5.0) | ND(5.0) |
| 1,2-Dibromo-3-chloropropane (DBCP) | ug/L | 0.2 | 1200 | 390 | ND(1.0) | ND(20) | ND(2500) | – | ND(1.0) | ND(1.0) | ND(1.0) | ND(1.0) | ND(1.0) | ND(1.0) | ND(1.0) | ND(1.0) |
| 1,2-Dibromoethane (Ethylene Dibromide) | ug/L | 0.05 | 2400 | 25 | ND(1.0) | ND(20) | ND(2500) | – | ND(1.0) | ND(1.0) | ND(1.0) | ND(1.0) | ND(1.0) | ND(1.0) | ND(1.0) | ND(1.0) |
| 1,2-Dichlorobenzene | ug/L | 600 | 160000 | 160000 | ND(1.0) | ND(20) | ND(2500) | – | ND(1.0) | ND(1.0) | ND(1.0) | ND(1.0) | ND(1.0) | ND(1.0) | ND(1.0) | ND(1.0) |
| 1,2-Dichloroethane | ug/L | 5 | 9600 | 19000 | ND(1.0) | ND(20) | ND(2500) | – | ND(1.0) | ND(1.0) | ND(1.0) | ND(1.0) | ND(1.0) | ND(1.0) | ND(1.0) | ND(1.0) |
| 1,2-Dichloropropane | ug/L | 5 | 16000 | 16000 | ND(1.0) | ND(20) | ND(2500) | – | ND(1.0) | ND(1.0) | ND(1.0) | ND(1.0) | ND(1.0) | ND(1.0) | ND(1.0) | ND(1.0) |
| 1,3-Dichlorobenzene | ug/L | 6.6 | – | 2000 | ND(1.0) | ND(20) | ND(2500) | – | ND(1.0) | ND(1.0) | ND(1.0) | ND(1.0) | ND(1.0) | ND(1.0) | ND(1.0) | ND(1.0) |
| 1,4-Dichlorobenzene | ug/L | 75 | 16000 | 6400 | ND(1.0) | ND(20) | ND(2500) | – | ND(1.0) | ND(1.0) | ND(1.0) | ND(1.0) | ND(1.0) | ND(1.0) | ND(1.0) | ND(1.0) |
| 2-Butanone (Methyl Ethyl Ketone) | ug/L | 13000 | 240000000 | 240000000 | ND(25) | ND(500) | ND(62000) | – | ND(25) | ND(25) | ND(25) | ND(25) | ND(25) | ND(25) | ND(25) | ND(25) |
| 2-Hexanone | ug/L | 1000 | 4200000 | 5200000 | ND(50) | ND(1000) | ND(120000) | – | ND(50) | ND(50) | ND(50) | ND(50) | ND(50) | ND(50) | ND(50) | ND(50) |
| 4-Methyl-2-Pentanone (Methyl Isobutyl Ketone) | ug/L | 1800 | 20000000 | 13000000 | ND(50) | ND(1000) | ND(120000) | – | ND(50) | ND(50) | ND(50) | ND(50) | ND(50) | ND(50) | ND(50) | ND(50) |
| Acetone | ug/L | 730 | 1000000000 | 31000000 | ND(25) | ND(500)U | ND(62000)U | – | ND(25) | ND(25) | ND(25) | ND(25) | ND(25) | ND(25) | ND(25) | ND(25)U |
| Benzene | ug/L | 5 | 5600 | 11000 | ND(1.0) | ND(20) | ND(2500) | – | ND(1.0) | ND(1.0) | ND(1.0) | ND(1.0) | ND(1.0) | ND(1.0) | ND(1.0) | ND(1.0) |
| Bromodichloromethane | ug/L | 80 | 4800 | 14000 | ND(1.0) | ND(20) | ND(2500) | – | ND(1.0) | ND(1.0) | ND(1.0) | ND(1.0) | ND(1.0) | ND(1.0) | ND(1.0) | ND(1.0) |
| Bromoform | ug/L | 80 | 470000 | 140000 | ND(1.0) | ND(20) | ND(2500) | – | ND(1.0) | ND(1.0) | ND(1.0) | ND(1.0) | ND(1.0) | ND(1.0) | ND(1.0) | ND(1.0) |
| Bromomethane (Methyl Bromide) | ug/L | 10 | 4000 | 70000 | ND(1.0) | ND(20) | ND(2500) | – | ND(1.0) | ND(1.0) | ND(1.0) | ND(1.0) | ND(1.0) | ND(1.0) | ND(1.0) | ND(1.0) |
| Carbon disulfide | ug/L | 800 | 250000 | 1200000 | ND(5.0) | ND(100) | ND(12000) | – | ND(5.0) | ND(5.0) | ND(5.0) | ND(5.0) | ND(5.0) | ND(5.0) | ND(5.0) | ND(5.0) |
| Carbon tetrachloride | ug/L | 5 | 370 | 4600 | ND(1.0) | ND(20) | ND(2500) | – | ND(1.0) | ND(1.0) | ND(1.0) | ND(1.0) | ND(1.0) | ND(1.0) | ND(1.0) | ND(1.0) |
| Chlorobenzene | ug/L | 100 | 210000 | 86000 | ND(1.0) | ND(20) | ND(2500) | – | ND(1.0) | ND(1.0) | ND(1.0) | ND(1.0) | ND(1.0) | ND(1.0) | ND(1.0) | ND(1.0) |
| Chloroethane | ug/L | 430 | 5700000 | 440000 | ND(1.0) | ND(20) | ND(2500) | – | ND(1.0) | ND(1.0) | ND(1.0) | ND(1.0) | ND(1.0) | ND(1.0) | ND(1.0) | ND(1.0) |
| Chloroform (Trichloromethane) | ug/L | 80 | 28000 | 150000 | 1.2 | ND(20) | ND(2500) | – | ND(1.0) | ND(1.0) | ND(1.0) | ND(1.0) | ND(1.0) | ND(1.0) | ND(1.0) | ND(1.0) |
| Chloromethane (Methyl Chloride) | ug/L | 260 | 8600 | 490000 | ND(1.0) | ND(20) | ND(2500) | – | ND(1.0) | ND(1.0) | ND(1.0) | ND(1.0) | ND(1.0) | ND(1.0) | ND(1.0) | ND(1.0) |
| cis-1,2-Dichloroethene | ug/L | 70 | 93000 | 200000 | ND(1.0) | ND(20) | ND(2500) | – | 18 | ND(1.0) | ND(1.0) | ND(1.0) | ND(1.0) | ND(1.0) | ND(1.0) | ND(1.0) |
| cis-1,3-Dichloropropene | ug/L | – | – | – | ND(1.0) | ND(20) | ND(2500) | – | ND(1.0) | ND(1.0) | ND(1.0) | ND(1.0) | ND(1.0) | ND(1.0) | ND(1.0) | ND(1.0) |
| Cyclohexane | ug/L | – | – | – | ND(1.0) | ND(20) | ND(2500) | – | ND(1.0) | ND(1.0) | ND(1.0) | ND(1.0) | ND(1.0) | ND(1.0) | ND(1.0) | ND(1.0) |
| Dibromochloromethane | ug/L | 80 | 14000 | 18000 | ND(1.0) | ND(20) | ND(2500) | – | ND(1.0) | ND(1.0) | ND(1.0) | ND(1.0) | ND(1.0) | ND(1.0) | ND(1.0) | ND(1.0) |
| Dichlorodifluoromethane (CFC-12) | ug/L | 1700 | 220000 | 300000 | ND(1.0) | ND(20)UJ | ND(2500)UJ | – | ND(1.0) | ND(1.0) | ND(1.0) | ND(1.0) | ND(1.0) | ND(1.0) | ND(1.0) | ND(1.0)UJ |
| Ethylbenzene | ug/L | 74 | 110000 | 170000 | ND(1.0) | ND(20) | ND(2500) | – | ND(1.0) | ND(1.0) | ND(1.0) | ND(1.0) | ND(1.0) | ND(1.0) | ND(1.0) | ND(1.0) |
| Isopropylbenzene | ug/L | 800 | 56000 | 56000 | ND(5.0) | ND(100) | ND(12000) | – | ND(5.0) | ND(5.0) | ND(5.0) | ND(5.0) | ND(5.0) | ND(5.0) | ND(5.0) | ND(5.0) |
| Methyl acetate | ug/L | – | – | – | ND(10) | ND(200) | ND(25000) | – | ND(10) | ND(10) | ND(10) | ND(10) | ND(10) | ND(10) | ND(10) | ND(10) |
| Methyl cyclohexane | ug/L | – | – | – | ND(1.0) | ND(20) | ND(2500) | – | ND(1.0) | ND(1.0) | ND(1.0) | ND(1.0) | ND(1.0) | ND(1.0) | ND(1.0) | ND(1.0) |
| Methyl Tert Butyl Ether | ug/L | 40 | 47000000 | 610000 | ND(5.0) | 25 J | ND(12000) | – | 5.9 | ND(5.0) | ND(5.0) | ND(5.0) | ND(5.0) | ND(5.0) | ND(5.0) | ND(5.0) |
| Methylene chloride | ug/L | 5 | 220000 | 220000 | ND(5.0) | ND(100) | ND(12000) | – | ND(5.0) | ND(5.0) | ND(5.0) | ND(5.0) | ND(5.0) | ND(5.0) | ND(5.0) | ND(5.0) |
| Styrene | ug/L | 100 | 170000 | 9700 | ND(1.0) | ND(20) | ND(2500) | – | ND(1.0) | ND(1.0) | ND(1.0) | ND(1.0) | ND(1.0) | ND(1.0) | ND(1.0) | ND(1.0) |
| Tetrachloroethene | ug/L | 5 | 25000 | 12000 | 0.36 J | 420 | 48000 | – | 1.4 | ND(1.0) | ND(1.0) | ND(1.0) | ND(1.0) | ND(1.0) | ND(1.0) | 8.5 |
| Toluene | ug/L | 790 | 530000 | 530000 | ND(1.0) | ND(20) | ND(2500) | – | ND(1.0) | ND(1.0) | ND(1.0) | ND(1.0) | ND(1.0) | ND(1.0) | ND(1.0) | ND(1.0) |
| trans-1,2-Dichloroethene | ug/L | 100 | 85000 | 220000 | ND(1.0) | ND(20) | ND(2500) | – | 2.3 | ND(1.0) | ND(1.0) | ND(1.0) | ND(1.0) | ND(1.0) | ND(1.0) | ND(1.0) |
| trans-1,3-Dichloropropene | ug/L | – | – | – | ND(1.0) | ND(20) | ND(2500) | – | ND(1.0) | ND(1.0) | ND(1.0) | ND(1.0) | ND(1.0) | ND(1.0) | ND(1.0) | ND(1.0) |
| Trichloroethene | ug/L | 5 | 15000 | 22000 | ND(1.0) | 7.4 J | ND(2500) | – | ND(1.0) | ND(1.0) | ND(1.0) | ND(1.0) | ND(1.0) | ND(1.0) | ND(1.0) | ND(1.0) |
| Trichlorofluoromethane (CFC-11) | ug/L | 2600 | 1100000 | 1100000 | ND(1.0) | ND(20) | ND(2500) | – | ND(1.0) | ND(1.0) | ND(1.0) | ND(1.0) | ND(1.0) | ND(1.0) | ND(1.0) | ND(1.0) |
| Trifluorotrichloroethane (Freon 113) | ug/L | 170000 | 170000 | 170000 | ND(1.0) | ND(20) | ND(2500) | – | ND(1.0) | ND(1.0) | ND(1.0) | ND(1.0) | ND(1.0) | ND(1.0) | ND(1.0) | ND(1.0) |
| Vinyl chloride | ug/L | 2 | 1100 | 1000 | ND(1.0) | ND(20) | ND(2500) | – | ND(1.0) | ND(1.0) | ND(1.0) | ND(1.0) | ND(1.0) | ND(1.0) | ND(1.0) | ND(1.0) |
| Xylene (total) | ug/L | 280 | 190000 | 190000 | ND(2.0) | ND(40) | ND(5000) | – | ND(2.0) | ND(2.0) | ND(2.0) | ND(2.0) | ND(2.0) | ND(2.0) | ND(2.0) | ND(2.0) |

Notes:
ND() - Non detect values.
J - Estimated concentration.
UJ - Estimated reporting limit.
Criteria:
– No criteria.

**TABLE 2**

BROADWAY VILLAGE AT LOWERTOWN
GROUNDWATER ANALYTICAL RESULTS - VOCs

| *Sample Location:* | | Res/Comm. I Drinking Water Protection Criteria | Res/Comm. I Soil Volatilization To Indoor Air Criteria | Res/Comm. I Direct Contact Criteria | *PTOW407D-06* | *PTOW407I-06* | *PTOW407S-06* | *PTOW504I-06* | *PTOW504S-06* | *TW401-07* | *TW403-07* |
|---|---|---|---|---|---|---|---|---|---|---|---|
| *Sample ID:* | | | | | *WG-35951-082007-EV-007* | *WG-35951-082007-EV-005* | *WG-35951-082007-EV-004* | *GW-35951-082107-JY-011* | *GW-35951-082107-JY-008* | *WG-35951-081707-EV-001* | *WG-35951-081707-EV-002* |
| *Sample Date:* | | | | | *8/20/2007* | *8/20/2007* | *8/20/2007* | *8/21/2007* | *8/21/2007* | *8/17/2007* | *8/17/2007* |
| *Sample Type:* | | | | | | | | | | | |
| *Parameters* | *Units* | *a* | *b* | *c* | | | | | | | |
| *Volatile Organic Compounds* | | | | | | | | | | | |
| 1,1,1-Trichloroethane | ug/L | 200 | 660000 | 1300000 | ND(420) | ND(33) | ND(1000) | ND(2000) | ND(1400) | ND(1.0) | ND(3.3) |
| 1,1,2,2-Tetrachloroethane | ug/L | 8.5 | 12000 | 4700 | ND(420)UJ | ND(33)UJ | ND(1000)UJ | ND(2000) | ND(1400) | ND(1.0) | ND(3.3) |
| 1,1,2-Trichloroethane | ug/L | 5 | 17000 | 21000 | ND(420) | ND(33) | ND(1000) | ND(2000) | ND(1400) | ND(1.0) | ND(3.3) |
| 1,1-Dichloroethane | ug/L | 880 | 1000000 | 2400000 | ND(420) | ND(33) | ND(1000) | ND(2000) | ND(1400) | ND(1.0) | ND(3.3) |
| 1,1-Dichloroethene | ug/L | 7 | 200 | 11000 | ND(420) | ND(33) | ND(1000) | ND(2000) | ND(1400) | ND(1.0) | ND(3.3) |
| 1,2,4-Trichlorobenzene | ug/L | 70 | 300000 | 19000 | ND(2100) | ND(170) | ND(5000) | ND(10000) | ND(7100) | ND(5.0) | ND(17) |
| 1,2-Dibromo-3-chloropropane (DBCP) | ug/L | 0.2 | 1200 | 390 | ND(420) | ND(33) | ND(1000) | ND(2000) | ND(1400) | ND(1.0) | ND(3.3) |
| 1,2-Dibromoethane (Ethylene Dibromide) | ug/L | 0.05 | 2400 | 25 | ND(420) | ND(33) | ND(1000) | ND(2000) | ND(1400) | ND(1.0) | ND(3.3) |
| 1,2-Dichlorobenzene | ug/L | 600 | 160000 | 160000 | ND(420) | ND(33) | ND(1000) | ND(2000) | ND(1400) | ND(1.0) | ND(3.3) |
| 1,2-Dichloroethane | ug/L | 5 | 9600 | 19000 | ND(420) | ND(33) | ND(1000) | ND(2000) | ND(1400) | ND(1.0) | ND(3.3) |
| 1,2-Dichloropropane | ug/L | 5 | 16000 | 16000 | ND(420) | ND(33) | ND(1000) | ND(2000) | ND(1400) | ND(1.0) | ND(3.3) |
| 1,3-Dichlorobenzene | ug/L | 6.6 | – | 2000 | ND(420) | ND(33) | ND(1000) | ND(2000) | ND(1400) | ND(1.0) | ND(3.3) |
| 1,4-Dichlorobenzene | ug/L | 75 | 16000 | 6400 | ND(420) | ND(33) | ND(1000) | ND(2000) | ND(1400) | ND(1.0) | ND(3.3) |
| 2-Butanone (Methyl Ethyl Ketone) | ug/L | 13000 | 240000000 | 240000000 | ND(10000) | ND(830) | ND(25000) | ND(50000) | ND(36000) | 9.0 J | 20 J |
| 2-Hexanone | ug/L | 1000 | 4200000 | 5200000 | ND(21000) | ND(1700) | ND(50000) | ND(100000) | ND(71000) | ND(50) | ND(170) |
| 4-Methyl-2-Pentanone (Methyl Isobutyl Ketone) | ug/L | 1800 | 20000000 | 13000000 | ND(21000) | ND(1700) | ND(50000) | ND(100000) | ND(71000) | ND(50) | ND(170) |
| Acetone | ug/L | 730 | 1000000000 | 31000000 | ND(100000)U | ND(830)U | ND(250000)U | ND(500000)U | ND(36000)U | 51 | 130 |
| Benzene | ug/L | 5 | 5600 | 11000 | ND(420) | ND(33) | ND(1000) | ND(2000) | ND(1400) | ND(1.0) | ND(3.3) |
| Bromodichloromethane | ug/L | 80 | 4800 | 14000 | ND(420) | ND(33) | ND(1000) | ND(2000) | ND(1400) | ND(1.0) | ND(3.3) |
| Bromoform | ug/L | 80 | 470000 | 140000 | ND(420) | ND(33) | ND(1000) | ND(2000) | ND(1400) | ND(1.0) | ND(3.3) |
| Bromomethane (Methyl Bromide) | ug/L | 10 | 4000 | 70000 | ND(420) | ND(33) | ND(1000) | ND(2000) | ND(1400) | ND(1.0) | ND(3.3) |
| Carbon disulfide | ug/L | 800 | 250000 | 1200000 | ND(2100) | ND(170) | ND(5000) | ND(10000) | ND(7100) | ND(5.0) | ND(17) |
| Carbon tetrachloride | ug/L | 5 | 370 | 4600 | ND(420) | ND(33) | ND(1000) | ND(2000) | ND(1400) | ND(1.0) | ND(3.3) |
| Chlorobenzene | ug/L | 100 | 210000 | 86000 | ND(420) | ND(33) | ND(1000) | ND(2000) | ND(1400) | ND(1.0) | ND(3.3) |
| Chloroethane | ug/L | 430 | 5700000 | 440000 | ND(420) | ND(33) | ND(1000) | ND(2000) | ND(1400) | ND(1.0)UJ | ND(3.3)UJ |
| Chloroform (Trichloromethane) | ug/L | 80 | 28000 | 150000 | ND(420) | ND(33) | ND(1000) | ND(2000) | ND(1400) | 0.21 J | 0.62 J |
| Chloromethane (Methyl Chloride) | ug/L | 260 | 8600 | 490000 | ND(420) | ND(33) | ND(1000) | ND(2000) | ND(1400) | ND(1.0) | ND(3.3) |
| cis-1,2-Dichloroethene | ug/L | 70 | 93000 | 200000 | 13000 | ND(33) | ND(1000) | ND(2000) | ND(1400) | ND(1.0) | 1.1 J |
| cis-1,3-Dichloropropene | ug/L | – | – | – | ND(420) | ND(33) | ND(1000) | ND(2000) | ND(1400) | ND(1.0)UJ | ND(3.3)UJ |
| Cyclohexane | ug/L | – | – | – | ND(420) | ND(33) | ND(1000) | ND(2000) | ND(1400) | ND(1.0) | ND(3.3) |
| Dibromochloromethane | ug/L | 80 | 14000 | 18000 | ND(420) | ND(33) | ND(1000) | ND(2000) | ND(1400) | ND(1.0) | ND(3.3) |
| Dichlorodifluoromethane (CFC-12) | ug/L | 1700 | 220000 | 300000 | ND(420) | ND(33) | ND(1000) | ND(2000)UJ | ND(1400)UJ | ND(1.0)UJ | ND(3.3)UJ |
| Ethylbenzene | ug/L | 74 | 110000 | 170000 | ND(420) | ND(33) | ND(1000) | ND(2000) | ND(1400) | ND(1.0) | ND(3.3) |
| Isopropylbenzene | ug/L | 800 | 56000 | 56000 | ND(2100) | ND(170) | ND(5000) | ND(10000) | ND(7100) | ND(5.0) | ND(17) |
| Methyl acetate | ug/L | – | – | – | ND(4200) | ND(330) | ND(10000) | ND(20000) | ND(14000) | ND(10) | ND(33) |
| Methyl cyclohexane | ug/L | – | – | – | ND(420) | ND(33) | ND(1000) | ND(2000) | ND(1400) | ND(1.0) | ND(3.3) |
| Methyl Tert Butyl Ether | ug/L | 40 | 47000000 | 610000 | ND(2100) | ND(170) | ND(5000) | ND(10000) | ND(7100) | 17 | 4.6 J |
| Methylene chloride | ug/L | 5 | 220000 | 220000 | ND(2100) | ND(170) | ND(5000) | ND(10000) | ND(7100) | ND(5.0) | ND(17) |
| Styrene | ug/L | 100 | 170000 | 9700 | ND(420) | ND(33) | ND(1000) | ND(2000) | ND(1400) | ND(1.0) | ND(3.3) |
| Tetrachloroethene | ug/L | 5 | 25000 | 12000 | 5500 | 1000 | 27000 | 49000 | 41000 | 1.4 | 60 |
| Toluene | ug/L | 790 | 530000 | 530000 | ND(420) | ND(33) | ND(1000) | ND(2000) | ND(1400) | 0.34 J | ND(3.3) |
| trans-1,2-Dichloroethene | ug/L | 100 | 85000 | 220000 | ND(420) | ND(33) | ND(1000) | ND(2000) | ND(1400) | ND(1.0) | ND(3.3) |
| trans-1,3-Dichloropropene | ug/L | – | – | – | ND(420) | ND(33) | ND(1000) | ND(2000) | ND(1400) | ND(1.0)UJ | ND(3.3)UJ |
| Trichloroethene | ug/L | 5 | 15000 | 22000 | 820 | ND(33) | ND(1000) | ND(2000) | ND(1400) | ND(1.0) | 3.2 J |
| Trichlorofluoromethane (CFC-11) | ug/L | 2600 | 1100000 | 1100000 | ND(420) | ND(33) | ND(1000) | ND(2000) | ND(1400) | ND(1.0) | ND(3.3) |
| Trifluorotrichloroethane (Freon 113) | ug/L | 170000 | 170000 | 170000 | ND(420) | ND(33) | ND(1000) | ND(2000) | ND(1400) | ND(1.0) | ND(3.3) |
| Vinyl chloride | ug/L | 2 | 1100 | 1000 | ND(420) | ND(33) | ND(1000) | ND(2000) | ND(1400) | ND(1.0) | ND(3.3) |
| Xylene (total) | ug/L | 280 | 190000 | 190000 | ND(830) | ND(67) | ND(2000) | ND(4000) | ND(2900) | ND(2.0) | ND(6.7) |

Notes:
ND() - Non detect values.
J - Estimated concentration.
UJ - Estimated reporting limit.
Criteria:
-- No criteria.

TABLE 3

BROADWAY VILLAGE AT LOWERTOWN
GROUNDWATER ANALYTICAL RESULTS - INORGANICS

| *Sample Location:* | | Res/Comm. I Drinking Water Protection Criteria | Res/Comm. I Soil Volatilization To Indoor Air Criteria | *MW-5* | *MW-15* | *MW-15* | *MW-16* | *MW107* | *MW107* | *MW110* | *MW201S-05* | *MW202D-05* | *MW202D-05* | *MW202S-05* |
|---|---|---|---|---|---|---|---|---|---|---|---|---|---|---|
| *Sample ID:* | | | | *GW-35951-082107-JY-022* | *GW-35951-082307-JY-045* | *GW-35951-082307-JY-046* | *GW-35951-082307-JY-047* | *GW-35951-082307-JY-041* | *GW-35951-082307-JY-042* | *GW-35951-082307-NRS-033* | *GW-35951-082107-EV-016* | *GW-35951-082107-EV-013* | *GW-35951-082107-EV-014* | *GW-35951-082107-EV-012* |
| *Sample Date:* | | | | *8/21/2007* | *8/23/2007* | *8/23/2007* | *8/23/2007* | *8/23/2007* | *8/23/2007* | *8/23/2007* | *8/21/2007* | *8/21/2007* | *8/21/2007* | *8/21/2007* |
| *Sample Type:* | | | | | | *Duplicate* | | | *Duplicate* | | | | *Duplicate* | |
| *Parameters* | *Units* | a | b | | | | | | | | | | | |
| *Metals* | | | | | | | | | | | | | | |
| Arsenic | ug/L | 10 | 4300 | ND(5.0) | ND(5.0) | ND(5.0) | ND(5.0) | ND(5.0) | ND(5.0) | ND(5.0) | ND(5.0) | ND(5.0) | ND(5.0) | ND(5.0) |
| Arsenic (Dissolved) | ug/L | 10 | 4300 | – | – | – | – | – | – | – | – | – | – | – |
| Barium | ug/L | 2000 | 14000000 | – | – | – | – | – | – | – | – | – | – | – |
| Barium (Dissolved) | ug/L | 2000 | 14000000 | – | – | – | – | – | – | – | – | – | – | – |
| Cadmium | ug/L | 5 | 190000 | – | – | – | – | – | – | – | – | – | – | – |
| Cadmium (Dissolved) | ug/L | 5 | 190000 | – | – | – | – | – | – | – | – | – | – | – |
| Chromium III (Trivalent) | ug/L | 100 | 290000000 | ND(20) | ND(20) | ND(20) | ND(20) | ND(20) | ND(20) | ND(20) | 14 J | ND(20) | ND(20) | ND(20) |
| Chromium Total | ug/L | 100 | 460000 | ND(5.0) | 2.4 J | ND(5.0) | ND(5.0) | ND(5.0) | ND(5.0) | ND(5.0) | 14.0 | ND(5.0) | ND(5.0) | ND(5.0) |
| Chromium Total (Dissolved) | ug/L | 100 | 460000 | – | – | – | – | – | – | – | – | – | – | – |
| Chromium VI (Hexavalent) | ug/L | 100 | 460000 | ND(10) | ND(10) | ND(10) | ND(10) | ND(10) | ND(10) | ND(10) | ND(10) | ND(10) | ND(10) | ND(10) |
| Copper | ug/L | 1000 | 7400000 | – | – | – | – | – | – | – | – | – | – | – |
| Copper (Dissolved) | ug/L | 1000 | 7400000 | – | – | – | – | – | – | – | – | – | – | – |
| Iron | ug/L | 300 | 58000000 | ND(100) | 762[x] | 1160[x] | ND(100) | 151 | 140 | 48.7 J | 253 | ND(100) | ND(100) | 117 |
| Iron (Dissolved) | ug/L | 300 | 58000000 | – | – | – | – | – | – | – | – | – | – | – |
| Lead | ug/L | 4 | – | – | – | – | – | – | – | – | – | – | – | – |
| Manganese | ug/L | 50 | 9100000 | ND(15.0) U | 280[x] | 326[x] | 469[x] | 52.1[x] | 51.6[x] | ND(15.0) U | 11.2 J | 105[x] | 103[x] | 7.6 J |
| Manganese (Dissolved) | ug/L | 50 | 9100000 | – | – | – | – | – | – | – | – | – | – | – |
| Mercury (Dissolved) | ug/L | 2 | 56 | – | – | – | – | – | – | – | – | – | – | – |
| Selenium | ug/L | 50 | 970000 | ND(5.0) | ND(5.0) | 3.5 J | 3.2 J | ND(5.0) | 2.9 J | ND(5.0) | 4.6 J | 3.0 J | ND(5.0) | ND(5.0) |
| Selenium (Dissolved) | ug/L | 50 | 970000 | – | – | – | – | – | – | – | – | – | – | – |
| Silver (Dissolved) | ug/L | 34 | 1500000 | – | – | – | – | – | – | – | – | – | – | – |
| Sodium | ug/L | 120000 | 1000000000 | 160000[x] | 110000 | 108000 | 1860000[x] | 119000 | 120000 | 275000[x] | 200000[x] | 493000[x] | 486000[x] | 161000[x] |
| Zinc (Dissolved) | ug/L | 2400 | 110000000 | – | – | – | – | – | – | – | – | – | – | – |
| *Miscellaneous* | | | | | | | | | | | | | | |
| Sodium Permanganate | ug/L | – | – | – | – | – | – | – | – | – | – | – | – | – |
| *General Chemistry* | | | | | | | | | | | | | | |
| Alkalinity, Total (as CaCO3) | ug/L | | | – | – | – | – | – | – | – | – | – | – | – |
| Ammonia | ug/L | 10000 | – | – | – | – | – | – | – | – | – | – | – | – |
| Bromate | ug/L | 10 | 4800 | – | – | – | – | – | – | – | – | – | – | – |
| Bromide | ug/L | – | – | – | – | – | – | – | – | – | – | – | – | – |
| Chemical Oxygen Demand (COD) | ug/L | – | – | – | – | – | – | – | – | – | – | – | – | – |
| Chloride | ug/L | 250000 | – | 123000 | 510000[x] | 514000[x] | 4350000[x] | 85500 | 87300 | 227000 | 140000 | 1080000[x] | 928000[x] | 70900 |
| Nitrate (as N) | ug/L | 10000 | 310000000 | 9200 | 100 | 100 | 9300 | 1100 | 1100 | 1800 | 14400[x] | 1100 | 1100 | 4500 |
| Nitrite (as N) | ug/L | 1000 | – | – | – | – | – | – | – | – | – | – | – | – |
| Orthophosphate | ug/L | – | – | – | – | – | – | – | – | – | – | – | – | – |
| Sulfate | ug/L | 250000 | – | 52300 | 120000 | 120000 | 112000 | 45300 | 48500 | 44200 | 186000 | 105000 | 105000 | 15400 |
| Sulfide | ug/L | – | – | – | – | – | – | – | – | – | – | – | – | – |
| Total Organic Carbon (TOC) | ug/L | – | – | – | – | – | – | – | – | – | – | – | – | – |

Notes:
x/x - Re-analysis results
ND() - Non detect values.
J - Estimated concentration.
UJ - Estimated reporting limit.
Criteria:
– No criteria.

TABLE 3

BROADWAY VILLAGE AT LOWERTOWN
GROUNDWATER ANALYTICAL RESULTS - INORGANICS

| *Sample Location:* | | Res/Comm. I Drinking Water Protection Criteria | Res/Comm. I Soil Volatilization To Indoor Air Criteria | *MW203I-05* | *MW203I-05* | *MW203S-05* | *MW203S-05* | *MW204D-05* | *MW204D-05* | *MW204I-05* | *MW204I-05* | *MW204I-05* | *MW204S-05* | *MW204S-05* |
|---|---|---|---|---|---|---|---|---|---|---|---|---|---|---|
| *Sample ID:* | | | | *GW-35951-081406-NRS-0133* | *WG-35951-082007-EV-006* | *GW-35951-081406-NRS-0127* | *GW-35951-082107-EV-010* | *GW-35951-081506-BA-0147* | *GW-35951-082107-JY-019* | *GW-35951-081606-NRS-0152* | *GW-35951-082306-EV-0173* | *GW-35951-082107-JY-015* | *GW-35951-081506-NRS-0145* | *GW-35951-082107-JY-009* |
| *Sample Date:* | | | | *8/14/2006* | *8/20/2007* | *8/14/2006* | *8/21/2007* | *8/15/2006* | *8/21/2007* | *8/16/2006* | *8/23/2006* | *8/21/2007* | *8/15/2006* | *8/21/2007* |
| *Sample Type:* | | | | | | | | | | | | | | |
| *Parameters* | *Units* | a | b | | | | | | | | | | | |
| *Metals* | | | | | | | | | | | | | | |
| Arsenic | ug/L | 10 | 4300 | ND(5.0) | ND(5.0) | ND(5.0) | ND(5.0) | ND(5.0) | ND(5.0) | ND(5.0) | – | ND(5.0) | 7.9 | 4.4 J |
| Arsenic (Dissolved) | ug/L | 10 | 4300 | – | – | – | – | – | – | – | – | – | – | – |
| Barium | ug/L | 2000 | 14000000 | 161 | – | 60.3 J | – | 204 | – | 136 | – | – | 54.1 J | – |
| Barium (Dissolved) | ug/L | 2000 | 14000000 | – | – | – | – | – | – | – | – | – | – | – |
| Cadmium | ug/L | 5 | 190000 | ND(1.0) | – | ND(1.0) | – | ND(1.0) | – | ND(1.0) | – | – | ND(1.0) | – |
| Cadmium (Dissolved) | ug/L | 5 | 190000 | – | – | – | – | – | – | – | – | – | – | – |
| Chromium III (Trivalent) | ug/L | 100 | 290000000 | – | ND(20) | – | ND(20) | – | ND(20) | – | – | ND(20) | – | 7.6 J |
| Chromium Total | ug/L | 100 | 460000 | ND(5.0) | ND(5.0) | ND(5.0) | ND(5.0) | ND(5.0) | ND(5.0) | ND(5.0) | – | ND(5.0) | 2.0 J | 7.6 |
| Chromium Total (Dissolved) | ug/L | 100 | 460000 | – | – | – | – | – | – | – | – | – | – | – |
| Chromium VI (Hexavalent) | ug/L | 100 | 460000 | ND(10) | ND(10) | ND(10) | ND(10) | ND(10) | ND(10) | ND(10) | – | ND(10) | 6 J | ND(10) |
| Copper | ug/L | 1000 | 7400000 | ND(2.0) U | – | ND(3.0) U | – | ND(2.6) U | – | ND(2.0) U | – | – | 6.8 | – |
| Copper (Dissolved) | ug/L | 1000 | 7400000 | – | – | – | – | – | – | – | – | – | – | – |
| Iron | ug/L | 300 | 58000000 | 1130* | ND(100) U | 696* | 179 | 1750* | 42.3 J | 1020* | – | 60.7 J | 2180* | 129 |
| Iron (Dissolved) | ug/L | 300 | 58000000 | – | – | – | – | – | – | – | – | – | – | – |
| Lead | ug/L | 4 | – | ND(3.0) | – | ND(3.0) | – | ND(3.0) | – | ND(3.0) | – | – | ND(3.0) | – |
| Manganese | ug/L | 50 | 9100000 | 235* | 397* | ND(15.0) U | 12.2 J | 632* | 655* | 286* | – | 2300* | 250* | 551* |
| Manganese (Dissolved) | ug/L | 50 | 9100000 | – | – | – | – | – | – | – | – | – | – | – |
| Mercury (Dissolved) | ug/L | 2 | 56 | – | – | – | – | – | – | – | – | – | – | – |
| Selenium | ug/L | 50 | 970000 | ND(5.0) | ND(5.0) | ND(5.0) | 3.3 J | ND(5.0) | 2.7 J | ND(5.0) | – | ND(5.0) | ND(7.2) U | 6.1 |
| Selenium (Dissolved) | ug/L | 50 | 970000 | – | – | – | – | – | – | – | – | – | – | – |
| Silver (Dissolved) | ug/L | 34 | 1500000 | – | – | – | – | – | – | – | – | – | – | – |
| Sodium | ug/L | 120000 | 1000000000 | 493000* | 541000* | 128000* | 107000 | 595000* | 645000* | 513000* | – | 509000* | 148000* | 118000 |
| Zinc (Dissolved) | ug/L | 2400 | 110000000 | – | – | – | – | – | – | – | – | – | – | – |
| *Miscellaneous* | | | | | | | | | | | | | | |
| Sodium Permanganate | ug/L | – | – | ND(5000) U | – | ND(5000) U | – | ND(5000) U | – | ND(5000) U | – | – | ND(5000) U | – |
| *General Chemistry* | | | | | | | | | | | | | | |
| Alkalinity, Total (as CaCO3) | ug/L | | | – | – | – | – | – | – | – | – | – | – | – |
| Ammonia | ug/L | 10000 | – | – | – | – | – | – | – | – | – | – | – | – |
| Bromate | ug/L | 10 | 4800 | R | – | R | – | R | – | R | – | – | R | – |
| Bromide | ug/L | – | – | 210 J | – | ND(500) | – | 280 J | – | ND(500) | – | – | ND(500) | – |
| Chemical Oxygen Demand (COD) | ug/L | – | – | – | – | – | – | – | – | – | – | – | – | – |
| Chloride | ug/L | 250000 | – | 99400 | 852000* | 143000 | 91000 | 1070000* | 966000* | 859000* | – | 794000* | 169000 | 94900 |
| Nitrate (as N) | ug/L | 10000 | 310000000 | 1900 | 1500 | 10800* | 6500 | 4500 | 4900 | – | 4600 | 400 | 11800* | 9500 |
| Nitrite (as N) | ug/L | 1000 | – | – | – | – | – | – | – | – | – | – | – | – |
| Orthophosphate | ug/L | – | – | – | – | – | – | – | – | – | – | – | – | – |
| Sulfate | ug/L | 250000 | – | 85500 | 85400 | 163000 J | 66800 | 112000 | 116000 | 140000 | – | 89600 | 213000 J | 110000 |
| Sulfide | ug/L | – | – | – | – | – | – | – | – | – | – | – | – | – |
| Total Organic Carbon (TOC) | ug/L | – | – | – | – | – | – | – | – | – | – | – | – | – |

Notes:
x/x - Re-analysis results
ND() - Non detect values.
J - Estimated concentration.
UJ - Estimated reporting limit.
Criteria:
– No criteria.

TABLE 3

BROADWAY VILLAGE AT LOWERTOWN
GROUNDWATER ANALYTICAL RESULTS - INORGANICS

| *Sample Location:* | | Res/Comm. I Drinking Water Protection Criteria | Res/Comm. I Soil Volatilization To Indoor Air Criteria | *MW205D-05* | *MW205S-05* | *MW206S-06* | *MW301D-06* | *MW301S-06* | *MW305D-07* | *MW305I-07* | *MW306S-07* | *MW306D-07* | *MW307D-07* | *MW307D-07* |
|---|---|---|---|---|---|---|---|---|---|---|---|---|---|---|
| *Sample ID:* | | | | *GW-35951-082307-JY-039* | *GW-35951-082307-JY-040* | *GW-35951-082107-JY-023* | *GW-35951-082107-EV-017* | *GW-35951-082307-NRS-037* | *GW-35951-082107-EV-025* | *GW-35951-082107-EV-024* | *GW-35951-082107-EV-026* | *GW-35951-082107-EV-018* | *GW-35951-082307-NRS-035* | *GW-35951-082307-NRS-036* |
| *Sample Date:* | | | | *8/23/2007* | *8/23/2007* | *8/21/2007* | *8/21/2007* | *8/23/2007* | *8/21/2007* | *8/21/2007* | *8/21/2007* | *8/21/2007* | *8/23/2007* | *8/23/2007* |
| *Sample Type:* | | | | | | | | | | | | | | *Duplicate* |
| *Parameters* | *Units* | a | b | | | | | | | | | | | |
| *Metals* | | | | | | | | | | | | | | |
| Arsenic | ug/L | 10 | 4300 | ND(5.0) | ND(5.0) | ND(5.0) | ND(5.0) | ND(5.0) | 6.4 | ND(5.0) | ND(5.0) | ND(5.0) | ND(5.0) | ND(5.0) |
| Arsenic (Dissolved) | ug/L | 10 | 4300 | – | – | – | – | – | – | – | – | – | – | – |
| Barium | ug/L | 2000 | 14000000 | – | – | – | – | – | – | – | – | – | – | – |
| Barium (Dissolved) | ug/L | 2000 | 14000000 | – | – | – | – | – | – | – | – | – | – | – |
| Cadmium | ug/L | 5 | 190000 | – | – | – | – | – | – | – | – | – | – | – |
| Cadmium (Dissolved) | ug/L | 5 | 190000 | – | – | – | – | – | – | – | – | – | – | – |
| Chromium III (Trivalent) | ug/L | 100 | 290000000 | ND(20) | ND(20) | ND(20) | ND(20) | 7.1 J | ND(20) | ND(20) | ND(20) | ND(20) | ND(20) | ND(20) |
| Chromium Total | ug/L | 100 | 460000 | ND(5.0) | ND(5.0) | ND(5.0) | ND(5.0) | 7.1 | 2.4 J | 1.8 J | ND(5.0) | 3.0 J | ND(5.0) | ND(5.0) |
| Chromium Total (Dissolved) | ug/L | 100 | 460000 | – | – | – | – | – | – | – | – | – | – | – |
| Chromium VI (Hexavalent) | ug/L | 100 | 460000 | ND(10) | ND(10) | ND(10) | ND(10) | ND(10) | ND(10) | ND(10) | ND(10) | ND(10) | 5 J | ND(10) |
| Copper | ug/L | 1000 | 7400000 | – | – | – | – | – | – | – | – | – | – | – |
| Copper (Dissolved) | ug/L | 1000 | 7400000 | – | – | – | – | – | – | – | – | – | – | – |
| Iron | ug/L | 300 | 58000000 | 889* | ND(100) | 596* | 766* | 4250* | 2230* | 2120* | 103 | 1190* | 1950* | 1890* |
| Iron (Dissolved) | ug/L | 300 | 58000000 | – | – | – | – | – | – | – | – | – | – | – |
| Lead | ug/L | 4 | – | – | – | – | – | – | – | – | – | – | – | – |
| Manganese | ug/L | 50 | 9100000 | 543* | 16.7 | 129* | 637* | 281* | 664* | 991* | 53.0* | 613* | 343* | 339* |
| Manganese (Dissolved) | ug/L | 50 | 9100000 | – | – | – | – | – | – | – | – | – | – | – |
| Mercury (Dissolved) | ug/L | 2 | 56 | – | – | – | – | – | – | – | – | – | – | – |
| Selenium | ug/L | 50 | 970000 | ND(5.0) | ND(5.0) | 3.0 J | ND(5.0) | 3.1 J | ND(5.0) | ND(5.0) | ND(5.0) | ND(5.0) | ND(5.0) | ND(5.0) |
| Selenium (Dissolved) | ug/L | 50 | 970000 | – | – | – | – | – | – | – | – | – | – | – |
| Silver (Dissolved) | ug/L | 34 | 1500000 | – | – | – | – | – | – | – | – | – | – | – |
| Sodium | ug/L | 120000 | 1000000000 | 275000* | 326000* | 353000* | 554000* | 399000* | 299000* | 358000* | 261000* | 413000* | 312000* | 306000* |
| Zinc (Dissolved) | ug/L | 2400 | 110000000 | – | – | – | – | – | – | – | – | – | – | – |
| *Miscellaneous* | | | | | | | | | | | | | | |
| Sodium Permanganate | ug/L | – | – | – | – | – | – | – | – | – | – | – | – | – |
| *General Chemistry* | | | | | | | | | | | | | | |
| Alkalinity, Total (as CaCO3) | ug/L | | | – | – | – | – | – | – | – | – | – | – | – |
| Ammonia | ug/L | 10000 | – | – | – | – | – | – | – | – | – | – | – | – |
| Bromate | ug/L | 10 | 4800 | – | – | – | – | – | – | – | – | – | – | – |
| Bromide | ug/L | – | – | – | – | – | – | – | – | – | – | – | – | – |
| Chemical Oxygen Demand (COD) | ug/L | – | – | – | – | – | – | – | – | – | – | – | – | – |
| Chloride | ug/L | 250000 | – | 636000* | 512000* | 505000* | 954000* | 435000* | 686000* | 843000* | 237000 | 748000* | 642000* | 647000* |
| Nitrate (as N) | ug/L | 10000 | 310000000 | ND(100) | 13200 J* | 7100 | 400 | 2000 | 300 | ND(100) | 7100 | ND(100) | 100 | 200 |
| Nitrite (as N) | ug/L | 1000 | – | – | – | – | – | – | – | – | – | – | – | – |
| Orthophosphate | ug/L | – | – | – | – | – | – | – | – | – | – | – | – | – |
| Sulfate | ug/L | 250000 | – | 98900 | 140000 | 116000 | 288000* | 339000* | 153000 | 142000 | 150000 | 106000 | 89500 | 89400 |
| Sulfide | ug/L | – | – | – | – | – | – | – | – | – | – | – | – | – |
| Total Organic Carbon (TOC) | ug/L | – | – | – | – | – | – | – | – | – | – | – | – | – |

Notes:
x/x - Re-analysis results
ND() - Non detect values.
J - Estimated concentration.
UJ - Estimated reporting limit.
Criteria:
– No criteria.

TABLE 3

BROADWAY VILLAGE AT LOWERTOWN
GROUNDWATER ANALYTICAL RESULTS - INORGANICS

| *Sample Location:* | | Res/Comm. I Drinking Water Protection Criteria | Res/Comm. I Soil Volatilization To Indoor Air Criteria | *MW307S-07* | *MW308D-07* | *MW308S-07* | *MW309D-07* | *MW309S-07* | *MW309S-07* | *MW313D-07* | *MW313S-07* | *MW314D-07* | *MW314S-07* | *PTOW407D-06* |
|---|---|---|---|---|---|---|---|---|---|---|---|---|---|---|
| *Sample ID:* | | | | *GW-35951-082307-NRS-034* | *GW-35951-082107-JY-021* | *GW-35951-082107-JY-020* | *GW-35951-082307-NRS-032* | *GW-35951-082307-NRS-029* | *GW-35951-082307-NRS-030* | *GW-35951-082307-NRS-031* | *GW-35951-082307-NRS-038* | *GW-35951-082307-JY-044* | *GW-35951-082307-JY-043* | *GW-35951-081106-NRS-0112* |
| *Sample Date:* | | | | *8/23/2007* | *8/21/2007* | *8/21/2007* | *8/23/2007* | *8/23/2007* | *8/23/2007* | *8/23/2007* | *8/23/2007* | *8/23/2007* | *8/23/2007* | *8/11/2006* |
| *Sample Type:* | | | | | | | | | *Duplicate* | | | | | |
| *Parameters* | *Units* | a | b | | | | | | | | | | | |
| *Metals* | | | | | | | | | | | | | | |
| Arsenic | ug/L | 10 | 4300 | ND(5.0) | ND(5.0) | ND(5.0) | ND(5.0) | ND(5.0) | ND(5.0) | ND(5.0) | 4.3 J | ND(5.0) | ND(5.0) | ND(5.0) |
| Arsenic (Dissolved) | ug/L | 10 | 4300 | – | – | – | – | – | – | – | – | – | – | – |
| Barium | ug/L | 2000 | 14000000 | – | – | – | – | – | – | – | – | – | – | 149 |
| Barium (Dissolved) | ug/L | 2000 | 14000000 | – | – | – | – | – | – | – | – | – | – | – |
| Cadmium | ug/L | 5 | 190000 | – | – | – | – | – | – | – | – | – | – | ND(1.0) |
| Cadmium (Dissolved) | ug/L | 5 | 190000 | – | – | – | – | – | – | – | – | – | – | – |
| Chromium III (Trivalent) | ug/L | 100 | 290000000 | ND(20) | ND(20) | ND(20) | ND(20) | ND(20) | ND(20) | ND(20) | ND(20) | ND(20) | ND(20) | – |
| Chromium Total | ug/L | 100 | 460000 | ND(5.0) | ND(5.0) | ND(5.0) | ND(5.0) | ND(5.0) | ND(5.0) | ND(5.0) | ND(5.0) | ND(5.0) | ND(5.0) | ND(5.0) |
| Chromium Total (Dissolved) | ug/L | 100 | 460000 | – | – | – | – | – | – | – | – | – | – | – |
| Chromium VI (Hexavalent) | ug/L | 100 | 460000 | ND(10) | ND(10) | ND(10) | ND(10) | ND(10) | ND(10) | ND(10) | ND(10) | ND(10) | ND(10) | ND(10) |
| Copper | ug/L | 1000 | 7400000 | – | – | – | – | – | – | – | – | – | – | 1.7 J |
| Copper (Dissolved) | ug/L | 1000 | 7400000 | – | – | – | – | – | – | – | – | – | – | – |
| Iron | ug/L | 300 | 58000000 | ND(100) | 883* | 424* | 74.8 J | 54.5 J | 45.1 J | 970* | 591* | 385* | 1470* | 1030* |
| Iron (Dissolved) | ug/L | 300 | 58000000 | – | – | – | – | – | – | – | – | – | – | – |
| Lead | ug/L | 4 | – | – | – | – | – | – | – | – | – | – | – | ND(3.0) |
| Manganese | ug/L | 50 | 9100000 | ND(15.0) U | 371* | 52.3* | 529* | 17.9 | 18.3 | 270* | 547* | 380* | 596* | 597* |
| Manganese (Dissolved) | ug/L | 50 | 9100000 | – | – | – | – | – | – | – | – | – | – | – |
| Mercury (Dissolved) | ug/L | 2 | 56 | – | – | – | – | – | – | – | – | – | – | – |
| Selenium | ug/L | 50 | 970000 | ND(5.0) | ND(5.0) | 5.5 | ND(5.0) | ND(5.0) | ND(5.0) | ND(5.0) | ND(5.0) | ND(5.0) | ND(5.0) | 10 |
| Selenium (Dissolved) | ug/L | 50 | 970000 | – | – | – | – | – | – | – | – | – | – | – |
| Silver (Dissolved) | ug/L | 34 | 1500000 | – | – | – | – | – | – | – | – | – | – | – |
| Sodium | ug/L | 120000 | 1000000000 | 117000 | 536000* | 142000* | 538000* | 164000* | 171000* | 75300 | 86000 | 148000* | 83400 | 383000* |
| Zinc (Dissolved) | ug/L | 2400 | 110000000 | – | – | – | – | – | – | – | – | – | – | – |
| *Miscellaneous* | | | | | | | | | | | | | | |
| Sodium Permanganate | ug/L | – | – | – | – | – | – | – | – | – | – | – | – | ND(5000) U |
| *General Chemistry* | | | | | | | | | | | | | | |
| Alkalinity, Total (as CaCO3) | ug/L | | | – | – | – | – | – | – | – | – | – | – | – |
| Ammonia | ug/L | 10000 | – | – | – | – | – | – | – | – | – | – | – | – |
| Bromate | ug/L | 10 | 4800 | – | – | – | – | – | – | – | – | – | – | 38* |
| Bromide | ug/L | – | – | – | – | – | – | – | – | – | – | – | – | ND(500) |
| Chemical Oxygen Demand (COD) | ug/L | – | – | – | – | – | – | – | – | – | – | – | – | – |
| Chloride | ug/L | 250000 | – | 150000 | 842000* | 121000 | 1060000* | 192000 | 195000 | 151000 | 167000 | 245000 | 164000 | 745000* |
| Nitrate (as N) | ug/L | 10000 | 310000000 | 300 | 900 | 10600* | 1200 | 2500 | 2400 | 43 J | ND(100) | ND(100) | 300 | 4300 |
| Nitrite (as N) | ug/L | 1000 | – | – | – | – | – | – | – | – | – | – | – | – |
| Orthophosphate | ug/L | – | – | – | – | – | – | – | – | – | – | – | – | – |
| Sulfate | ug/L | 250000 | – | 68400 | 123000 | 195000 | 117000 | 99300 | 99500 | 53600 | 42000 | 77400 | 42700 | 159000 |
| Sulfide | ug/L | – | – | – | – | – | – | – | – | – | – | – | – | – |
| Total Organic Carbon (TOC) | ug/L | – | – | – | – | – | – | – | – | – | – | – | – | – |

Notes:
x/x - Re-analysis results
ND() - Non detect values.
J - Estimated concentration.
UJ - Estimated reporting limit.
Criteria:
– No criteria.

TABLE 3

BROADWAY VILLAGE AT LOWERTOWN
GROUNDWATER ANALYTICAL RESULTS - INORGANICS

| *Sample Location:* | | Res/Comm. I Drinking Water Protection Criteria | Res/Comm. I Soil Volatilization To Indoor Air Criteria | *PTOW407D-06* | *PTOW407I-06* | *PTOW407I-06* | *PTOW407S-06* | *PTOW407S-06* | *PTOW504I-06* | *PTOW504I-06* | *PTOW504S-06* | *PTOW504S-06* | *PTOW504S-06* |
|---|---|---|---|---|---|---|---|---|---|---|---|---|---|
| *Sample ID:* | | | | *WG-35951-082007-EV-007* | *GW-35951-081106-NRS-0111* | *WG-35951-082007-EV-005* | *GW-35951-081106-NRS-0115* | *WG-35951-082007-EV-004* | *GW-35951-081706-NRS-0157* | *GW-35951-082107-JY-011* | *GW-35951-081606-NRS-0159* | *GW-35951-082306-EV-0176* | *GW-35951-082107-JY-008* |
| *Sample Date:* | | | | *8/20/2007* | *8/11/2006* | *8/20/2007* | *8/11/2006* | *8/20/2007* | *8/17/2006* | *8/21/2007* | *8/16/2006* | *8/23/2006* | *8/21/2007* |
| *Sample Type:* | | | | | | | | | | | | | |
| *Parameters* | *Units* | a | b | | | | | | | | | | |
| *Metals* | | | | | | | | | | | | | |
| Arsenic | ug/L | 10 | 4300 | 24.0* | ND(5.0) | ND(5.0) | ND(5.0) | ND(5.0) | ND(5.0) | ND(5.0) | ND(5.0) | – | ND(5.0) |
| Arsenic (Dissolved) | ug/L | 10 | 4300 | – | – | – | – | – | – | – | – | – | – |
| Barium | ug/L | 2000 | 14000000 | – | 119 | – | 74.7 J | – | 176 | – | 105 | – | – |
| Barium (Dissolved) | ug/L | 2000 | 14000000 | – | – | – | – | – | – | – | – | – | – |
| Cadmium | ug/L | 5 | 190000 | – | ND(1.0) | – | ND(1.0) | – | ND(1.0) | – | ND(1.0) | – | – |
| Cadmium (Dissolved) | ug/L | 5 | 190000 | – | – | – | – | – | – | – | – | – | – |
| Chromium III (Trivalent) | ug/L | 100 | 290000000 | ND(20) | – | ND(20) | – | ND(20) | – | ND(20) | – | – | ND(20) |
| Chromium Total | ug/L | 100 | 460000 | 21.2 | ND(5.0) | ND(5.0) | ND(5.0) | ND(5.0) | ND(5.0) | 1.7 J | ND(5.0) | – | ND(5.0) |
| Chromium Total (Dissolved) | ug/L | 100 | 460000 | – | – | – | – | – | – | – | – | – | – |
| Chromium VI (Hexavalent) | ug/L | 100 | 460000 | 40 | 2 J | ND(10) | ND(10) | ND(10) | ND(10) | 7 J | ND(10) | – | ND(10) |
| Copper | ug/L | 1000 | 7400000 | – | 3.8 | – | 2.6 | – | 1.9 J | – | ND(2.6) U | – | – |
| Copper (Dissolved) | ug/L | 1000 | 7400000 | – | – | – | – | – | – | – | – | – | – |
| Iron | ug/L | 300 | 58000000 | 8200* | 1510* | ND(100) U | 847* | 420* | 1380* | 393* | 742* | – | 109 |
| Iron (Dissolved) | ug/L | 300 | 58000000 | – | – | – | – | – | – | – | – | – | – |
| Lead | ug/L | 4 | – | – | ND(3.0) | – | ND(3.0) | – | ND(3.0) | – | ND(3.0) | – | – |
| Manganese | ug/L | 50 | 9100000 | 205* | 358* | 707* | 197* | 7.3 J | 510* | 683* | 226* | – | 113* |
| Manganese (Dissolved) | ug/L | 50 | 9100000 | – | – | – | – | – | – | – | – | – | – |
| Mercury (Dissolved) | ug/L | 2 | 56 | – | – | – | – | – | – | – | – | – | – |
| Selenium | ug/L | 50 | 970000 | ND(5.0) | 2.5 J | ND(5.0) | 6.0 | 2.6 J | ND(5.0) | 11.8 | 2.7 J | – | 7.0 |
| Selenium (Dissolved) | ug/L | 50 | 970000 | – | – | – | – | – | – | – | – | – | – |
| Silver (Dissolved) | ug/L | 34 | 1500000 | – | – | – | – | – | – | – | – | – | – |
| Sodium | ug/L | 120000 | 1000000000 | 1640000* | 323000* | 394000* | 170000* | 151000* | 463000 J* | 1340000* | 203000* | – | 146000* |
| Zinc (Dissolved) | ug/L | 2400 | 110000000 | – | – | – | – | – | – | – | – | – | – |
| *Miscellaneous* | | | | | | | | | | | | | |
| Sodium Permanganate | ug/L | – | – | – | ND(5000) U | – | ND(5000) U | – | ND(5000) U | – | ND(5000) U | – | – |
| *General Chemistry* | | | | | | | | | | | | | |
| Alkalinity, Total (as CaCO3) | ug/L | | | – | – | – | – | – | – | – | – | – | – |
| Ammonia | ug/L | 10000 | – | – | – | – | – | – | – | – | – | – | – |
| Bromate | ug/L | 10 | 4800 | – | ND(10) | – | ND(10) | – | R | – | R | – | – |
| Bromide | ug/L | – | – | – | ND(500) | – | ND(500) | – | ND(500) | – | ND(500) | – | – |
| Chemical Oxygen Demand (COD) | ug/L | – | – | – | – | – | – | – | – | – | – | – | – |
| Chloride | ug/L | 250000 | – | 1080000* | 599000* | 597000* | 188000 | 64300 | 1690000* | 1000000* | 229000 J | – | 99500 |
| Nitrate (as N) | ug/L | 10000 | 310000000 | ND(100) | 4700 | 3200 | 12300* | 6900 | 2400 | ND(100) | – | 15800* | 10900* |
| Nitrite (as N) | ug/L | 1000 | – | – | – | – | – | – | – | – | – | – | – |
| Orthophosphate | ug/L | – | – | – | – | – | – | – | – | – | – | – | – |
| Sulfate | ug/L | 250000 | – | 95200 | 142000 | 74500 | 156000 | 50300 | 138000 J | 157000 | 160000 | – | 158000 |
| Sulfide | ug/L | – | – | – | – | – | – | – | – | – | – | – | – |
| Total Organic Carbon (TOC) | ug/L | – | – | – | – | – | – | – | | | | | |

Notes:
x/x - Re-analysis results
ND() - Non detect values.
J - Estimated concentration.
UJ - Estimated reporting limit.
Criteria:
-- No criteria.

DESCRIPTION

Land Situated in the State of Michigan, County of Washtenaw and in the City of Ann Arbor. Described as follows:

PARCEL "A"
Commencing at the Northwest corner of Lot 30 of "ASSESSOR'S PLAT NO. 32", as recorded in Liber 9 of Plats, Page 45, Washtenaw County Records; thence North 57°48'00" East 15.86 feet along the Southerly right-of-way line of Broadway Street (variable width) to the POINT OF BEGINNING; thence continuing along said Southerly right-of-way line in the following two (2) courses: (1) North 57°48'00" East 10.02 feet and (2) North 58°18'42" East 33.55 feet (recorded as North 58°18'00" East); thence along the centerline of Traver's Creek in the following four (4) courses: (1) South 22°41'48" East 13.78 feet (recorded as South 22°42'30" East), (2) South 52°07'48" East 51.77 feet (recorded as South 52°08'30" East), (3) South 65°43'18" East 29.31 feet (recorded as South 65°44'00" East) and (4) South 73°04'18" East 50.81 feet (recorded as South 73°06'00" East); thence North 37°31'42" East 25.40 feet (recorded as North 37°31'00" East); thence South 79°25'00" East 177.53 feet along the Northeasterly line of Lot 25 of said "ASSESSOR'S PLAT NO. 32"; thence South 31°16'00" West 107.37 feet along the Northwesterly line of Ross Maiden Lane Apartments; thence North 58°44'00" West 116.74 feet; thence South 76°16'00" West 120.49 feet; thence North 32°12'00" West 142.55 feet to the Point of Beginning. Being a part of Lots 25 and 30 of said "ASSESSOR'S PLAT NO. 32", as recorded in Liber 9 of Plats, Page 45, Washtenaw County Records.

PARCEL "B"
Commencing at the Westerly corner of Lot 78, "ASSESSOR'S PLAT NO. 33", a subdivision in the Southwest 1/4 of Section 21, Town 2 South, Range 6 East, City of Ann Arbor, Washtenaw County, Michigan as recorded in Liber 9 of Plats, Page 46, Washtenaw County Records; thence South 58°44'00" East 653.70 feet along the Northerly right-of-way line of Maiden Lane (50 feet wide); thence North 31°16'00" East 255.50 feet; thence North 58°44'00" West 75.00 feet; thence North 31°16'00" East 250.04 feet along the Northwesterly line of Ross Maiden Lane Apartments; thence North 58°44'00" West 13.39 feet to a point on the outside foundation line of a proposed parking garage; said point being the POINT OF BEGINNING; thence along said outside foundation line in the following nine courses: South 31°16'00" West 5.92 feet, South 58°44'00" East 6.00 feet, South 31°16'00" West 9.50 feet, North 58°44'00" West 6.00 feet, South 31°16'00" West 225.17 feet, South 58°44'00" East 6.00 feet, South 31°16'00" West 9.50 feet, North 58°44'00" West 6.00 feet and South 31°16'00" West 6.29 feet; thence North 58°44'00" West 107.82 feet; thence North 31°16'00" East 3.13 feet; thence North 58°44'00" West 18.07 feet to a common outside foundation line of said proposed parking garage with a proposed building; thence along said common outside foundation line in the following three courses: North 31°16'00" East 219.90 feet, North 76°16'00" East 47.16 feet and South 58°44'00" East 92.54 feet to the Point of Beginning. Being a part of Lot 25, "ASSESSOR'S PLAT NO. 32", a subdivision in the Southwest 1/4 of Section 21, Town 2 South, Range 6 East, City of Ann Arbor, Washtenaw County, Michigan as recorded in Liber 9 of Plats, Page 45, Washtenaw County Records.

PARCEL "C"
BEGINNING at the Westerly corner of Lot 78 "ASSESSOR'S PLAT NO. 33", a subdivision in the Southwest 1/4 of Section 21, Town 2 South, Range 6 East, City of Ann Arbor, Washtenaw County, Michigan as recorded in Liber 9 of Plats, Page 46, Washtenaw County Records; thence Northeasterly along the Southerly right-of-way line of Broadway Street in the following three courses: North 57°48'00" East 564.63 feet, North 01°45'27" East 20.50 feet and North 57°48'00" East 15.86 feet; thence South 32°12'00" East 142.55 feet; thence North 76°16'00" East 120.49 feet; thence South 58°44'00" East 116.74 feet; thence South 31°16'00" West 53.16 feet along the Northwesterly line of Ross Maiden Lane Apartments to a point on the Southeasterly extension of the outside foundation line of a proposed parking garage common with the foundation line of a proposed building; thence along said common foundation line and the Southeasterly extension thereof in the following three courses: North 58°44'00" West 105.93 feet, South 76°16'00" West 47.16 feet and South 31°16'00" West 219.90 feet; thence South 58°44'00" East 18.07 feet; thence South 31°16'00" West 3.13 feet; thence South 58°44'00" East 107.82 feet to a point on the outside foundation line of said proposed parking garage; thence along said outside foundation line in the following nine courses: North 31°16'00" East 6.29 feet, South 58°44'00" East 6.00 feet, North 31°16'00" East 9.50 feet, North 58°44'00" West 6.00 feet, North 31°16'00" East 225.17 feet, South 58°44'00" East 6.00 feet, North 31°16'00" East 9.50 feet, North 58°44'00" West 6.00 feet and North 31°16'00" East 5.92 feet; thence South 58°44'00" East 13.39 feet; thence South 31°16'00" West 250.04 feet along said Northwesterly line of Ross Maiden Lane Apartments; thence South 58°44'00" East 75.00 feet; thence South 31°16'00" West 255.50 feet along the Westerly right-of-way line of Nielsen Court; thence North 58°44'00" West 653.70 feet along the Northerly right-of-way line of Maiden Lane to the Point of Beginning. Being Lots 26 through 29 inclusive and a portion of Lots 25 and 30 of "ASSESSOR'S PLAT NO. 32", a subdivision in the Southwest 1/4 of Section 21, Town 2 South, Range 6 East, City of Ann Arbor, Washtenaw County, Michigan as recorded in Liber 9 of Plats, Page 45, Washtenaw County Records and Lots 72 through 87 inclusive and a vacated alley of "ASSESSOR'S PLAT NO. 33", a subdivision in the Southwest 1/4 of Section 21, Town 2 South, Range 6 East, City of Ann Arbor, Washtenaw County, Michigan as recorded in Liber 9 of Plats, Page 46, Washtenaw County Records.

~~PARCEL "D"~~
~~Lot 54 of Assessor's Plat No. 33, as recorded in Liber 9 of Plats, Page 46, Washtenaw County Records~~

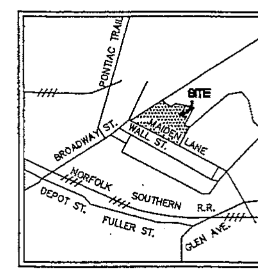


Vicinity Map
NOT TO SCALE

NOTES:
1. PARCEL "D" IS NOT INCLUDED IN THIS SURVEY.
2. LIBER 245, PAGE 541 (B-II-7) DOES NOT AFFECT PARCEL "D" OR THIS SURVEY.
3. LIBER 250, PAGE 143 (B-II-6) DOES NOT AFFECT PARCEL "D" OR THIS SURVEY.
4. LIBER 1074, PAGE 67 (B-II-11) DOES NOT AFFECT THIS SURVEY.

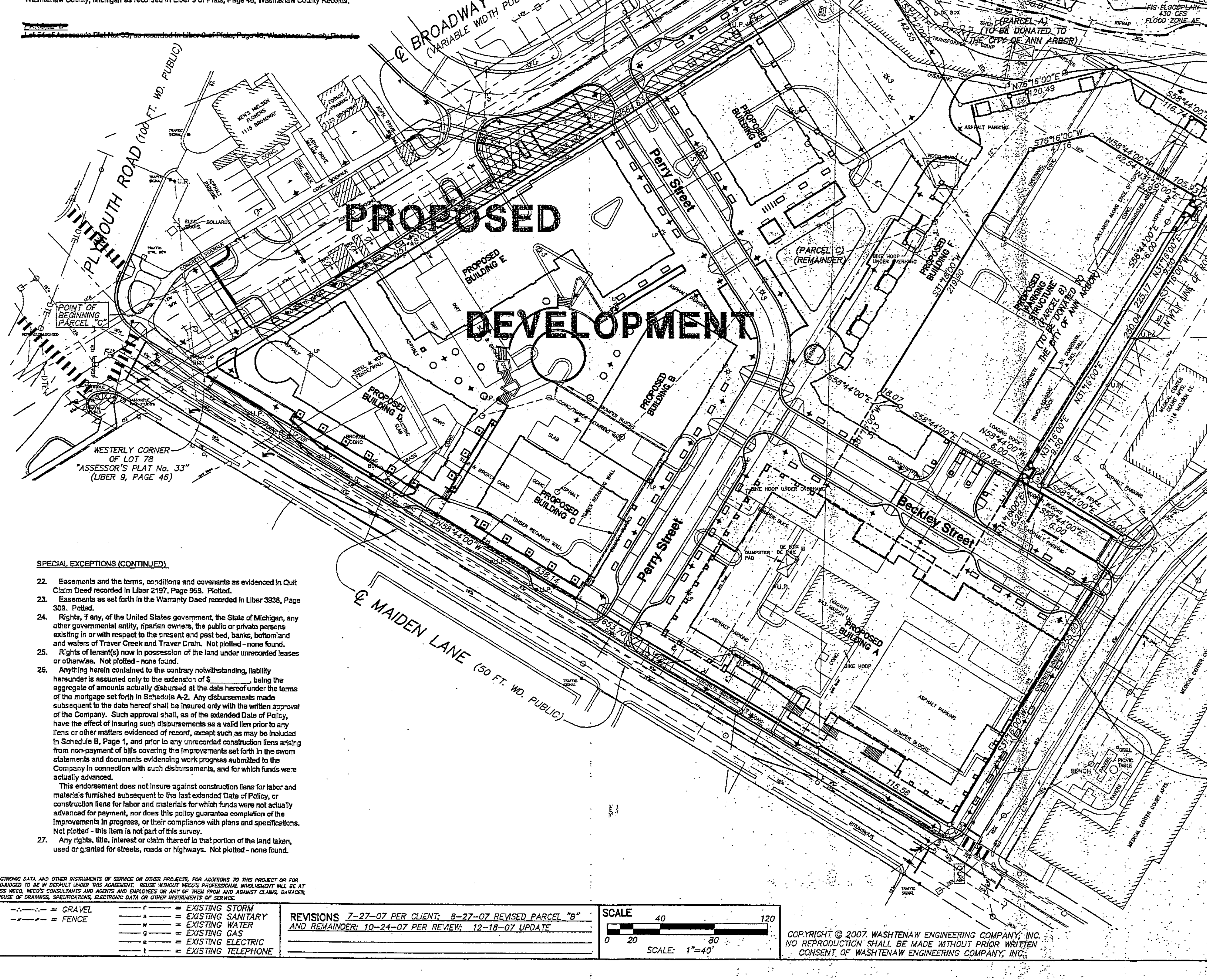


SCHEDULE B - SECTION II

STANDARD EXCEPTIONS

1. Any facts, rights, interests, or claims that are not shown in the public records but that could be ascertained by an inspection of the land or by making inquiry of persons in possession of the land. Not plotted - none found.
2. Any encroachments, encumbrance, violation, variation, or adverse circumstance affecting the title including discrepancies, conflicts in boundary lines, shortage in area, or any other facts that would be disclosed by an accurate and complete land survey of the land, and that are not shown in the public records. Not plotted - none found.
3. Any lien, or right to a lien, for services, labor or material heretofore or hereafter furnished, imposed by law and not shown in the public records. None found.
4. Rights of parties in possession of all or any part of the premises, including, but not limited to, easements, claims of easements or encumbrances that are not shown in the public records. Not plotted - none found.
5. The lien of real estate taxes or assessments imposed on the title by a governmental authority that are not shown as existing liens in the records of any taxing authority that levies taxes or assessments on real property or in the public records. None found.

SPECIAL EXCEPTIONS

6. Terms, conditions and provisions contained in Building and Use Restrictions recorded in Liber 250, Page 143, but omitting any such covenant or restriction based on race, color, religion, sex, handicap, familial status or national origin. Not plotted. Does not affect Parcel "D" or this survey.
7. Terms, conditions and provisions contained in Building and Use Restrictions recorded in Liber 245, Page 541, but omitting any such covenant or restriction based on race, color, religion, sex, handicap, familial status or national origin. Not plotted. Does not affect Parcel "D" or this survey.
8. Right of Way for Storm and Sanitary Sewer recorded in Liber 628, Page 226. Plotted.
9. Easement to establish, use and repair drain and evidenced by Warranty Deed recorded in Liber 903, Page 111. Plotted.
10. Terms, conditions and covenants of the Resolution to close Alley in Assessor's Plat No. 33 recorded in Liber 935, Page 629. Plotted.
11. Easements as set forth in the Warranty Deed recorded in Liber 1074, Page 67. Not plotted - not on subject property.
12. Terms, conditions and covenants of the Declaration of Taking recorded in Liber 1712, Page 253 and Liber 1730, Page 456. Plotted.
13. Right of Way Agreement (Public Utilities) recorded in Liber 1756, Page 994. Plotted.
14. Grant of Easement recorded in Liber 1791, Page 160. Plotted
15. Grant of Easement recorded in Liber 1857, Page 620. Plotted
16. Easement granted to Michigan Bell Telephone Company recorded in Liber 1925, Page 652. Plotted.
17. Easement granted to Michigan Bell Telephone Company recorded in Liber 1925, Page 653. Plotted.
18. Easement granted to Michigan Bell Telephone Company recorded in Liber 1925, Page 654. Plotted.
19. Easement granted to The Detroit Edison Company recorded in Liber 1968, Page 152. Plotted.
20. Easement granted to The Detroit Edison Company recorded in Liber 1973, Page 649. Plotted.
21. Easement granted to The Detroit Edison Company recorded in Liber 1978, Page 121. Plotted.

SPECIAL EXCEPTIONS (CONTINUED)

22. Easements and the terms, conditions and covenants as evidenced in Quit Claim Deed recorded in Liber 2197, Page 958. Plotted.
23. Easements as set forth in the Warranty Deed recorded in Liber 3938, Page 309. Potted.
24. Rights, if any, of the United States government, the State of Michigan, any other governmental entity, riparian owners, the public or private persons existing in or with respect to the present and past bed, banks, bottomland and waters of Traver Creek and Traver Drain. Not plotted - none found.
25. Rights of tenant(s) now in possession of the land under unrecorded leases or otherwise. Not plotted - none found.
25. Anything herein contained to the contrary notwithstanding, liability hereunder is assumed only to the extension of $__________, being the aggregate of amounts actually disbursed at the date hereof under the terms of the mortgage set forth in Schedule A-2. Any disbursements made subsequent to the date hereof shall be insured only with the written approval of the Company. Such approval shall, as of the extended Date of Policy, have the effect of insuring such disbursements as a valid lien prior to any liens or other matters evidenced of record, except such as may be included in Schedule B, Page 1, and prior to any unrecorded construction liens arising from non-payment of bills covering the improvements set forth in the sworn statements and documents evidencing work progress submitted to the Company in connection with such disbursements, and for which funds were actually advanced.
This endorsement does not insure against construction liens for labor and materials furnished subsequent to the last extended Date of Policy, or construction liens for labor and materials for which funds were not actually advanced for payment, nor does this policy guarantee completion of the improvements in progress, or their compliance with plans and specifications. Not plotted - this item is not part of this survey.
27. Any rights, title, interest or claim thereof to that portion of the land taken, used or granted for streets, roads or highways. Not plotted - none found.

*THE OWNER SHALL NOT USE OR AUTHORIZE ANY OTHER PERSON TO USE THE DRAWINGS, SPECIFICATIONS, ELECTRONIC DATA AND OTHER INSTRUMENTS OF SERVICE ON OTHER PROJECTS, FOR ADDITIONS TO THIS PROJECT OR FOR COMPLETION OF THE PROJECT BY OTHERS SO LONG AS WASHTENAW ENGINEERING COMPANY (WECO) IS NOT ADJUDGED TO BE IN DEFAULT UNDER THIS AGREEMENT. REUSE WITHOUT WECO'S PROFESSIONAL INVOLVEMENT WILL BE AT THE OWNER'S SOLE RISK AND WITHOUT LIABILITY TO WECO. THE OWNER SHALL INDEMNIFY AND HOLD HARMLESS WECO, WECO'S CONSULTANTS AND AGENTS AND EMPLOYEES OR ANY OF THEM FROM AND AGAINST CLAIMS, DAMAGES, LOSSES AND EXPENSES, INCLUDING BUT NOT LIMITED TO ATTORNEYS' FEES, ARISING OUT OF UNAUTHORIZED REUSE OF DRAWINGS, SPECIFICATIONS, ELECTRONIC DATA OR OTHER INSTRUMENTS OF SERVICE.*

LEGEND

| | | | | |
|---|---|---|---|---|
| ☼ = LIGHT POLE | 901.25 = SPOT ELEV. | TC = TOP OF CURB | —·—·— = GRAVEL | —r— = EXISTING STORM |
| = UTILITY POLE | = POST | TW = TOP OF WALL | —x—x— = FENCE | —s— = EXISTING SANITARY |
| = GUY ANCHOR | ⊗ = GATE VALVE | ○ = MANHOLE | | —w— = EXISTING WATER |
| = HYDRANT | = SIGN | □ = CATCHBASIN | | —g— = EXISTING GAS |
| | | = END SECTION | | —e— = EXISTING ELECTRIC |
| | | | | —t— = EXISTING TELEPHONE |

REVISIONS *7-27-07 PER CLIENT; 8-27-07 REVISED PARCEL "B" AND REMAINDER; 10-24-07 PER REVIEW; 12-18-07 UPDATE*

SCALE
0 20 40 80 120
SCALE: 1"=40'

*COPYRIGHT © 2007. WASHTENAW ENGINEERING COMPANY, INC. NO REPRODUCTION SHALL BE MADE WITHOUT PRIOR WRITTEN CONSENT OF WASHTENAW ENGINEERING COMPANY, INC.*

*THE UNDERGROUND UTILITIES SHOWN HAVE BEEN LOCATED FROM FIELD SURVEY INFORMATION AND EXISTING DRAWINGS. THE SURVEYOR MAKES NO GUARANTEES THAT THE UNDERGROUND UTILITIES SHOWN COMPRISE ALL SUCH UTILITIES IN THE AREA, EITHER IN-SERVICE OR ABANDONED. THE SURVEYOR FURTHER DOES NOT WARRANT THAT THE UNDERGROUND UTILITIES SHOWN ARE IN THE EXACT LOCATION INDICATED. ALTHOUGH THE SURVEYOR DOES CERTIFY THAT THEY ARE LOCATED AS ACCURATELY AS POSSIBLE FROM INFORMATION AVAILABLE. THE SURVEYOR HAS NOT PHYSICALLY LOCATED THE UNDERGROUND UTILITIES.*

WASHTENAW ENGINEERING
CIVIL ENGINEERS • PLANNERS
SURVEYORS • LANDSCAPE ARCHITECTS
P.O. BOX 1128
3250 WEST LIBERTY RD ANN ARBOR, MICHIGAN 48106
TEL 734-761-8800 FAX 734-761-9530

# ALTA/ACSM LAND TITLE SURVEY

CLIENT *STRATHMORE DEVELOPMENT COMPANY*

# LOWER TOWN

SECTION 21 TOWN 2 SOUTH RANGE 6 EAST
CITY OF ANN ARBOR
WASHTENAW COUNTY • MICHIGAN

DESIGN
DRAWN DJH
CHECK TLS, RCS
DATE 5-30-06
DWG NO. 29797-ALTA
LAYOUT
JOB NO. 29797
FIELD BOOK -
FILE NO. 9342
SHEET 2 OF 2

3 WORKING DAYS
BEFORE YOU DIG
CALL MISS DIG
1-800-482-7171
FOR THE LOCATION OF UNDERGROUND FACILITIES

THE LOCATIONS OF EXISTING UNDERGROUND UTILITIES ARE SHOWN IN AN APPROXIMATE WAY ONLY AND HAVE NOT BEEN INDEPENDENTLY VERIFIED BY THE OWNER OR ITS REPRESENTATIVE. THE CONTRACTOR SHALL DETERMINE THE EXACT LOCATION OF ALL EXISTING UTILITIES BEFORE COMMENCING WORK, AND AGREES TO BE FULLY RESPONSIBLE FOR ANY AND ALL DAMAGES WHICH MIGHT BE OCCASIONED BY THE CONTRACTOR'S FAILURE TO EXACTLY LOCATE AND PRESERVE ANY AND ALL UNDERGROUND UTILITIES.

**Notice:**
CONSTRUCTION SITE SAFETY IS THE SOLE RESPONSIBILITY OF THE CONTRACTOR; NEITHER THE OWNER NOR THE ENGINEER SHALL BE EXPECTED TO ASSUME ANY RESPONSIBILITY FOR SAFETY OF THE WORK, OF PERSONS ENGAGED IN THE WORK OF ANY NEARBY STRUCTURES, OR OF ANY OTHER PERSONS.

COPYRIGHT © 2002 ATWELL-HICKS, INC. NO REPRODUCTION SHALL BE MADE WITHOUT THE PRIOR WRITTEN CONSENT OF ATWELL-HICKS, INC.

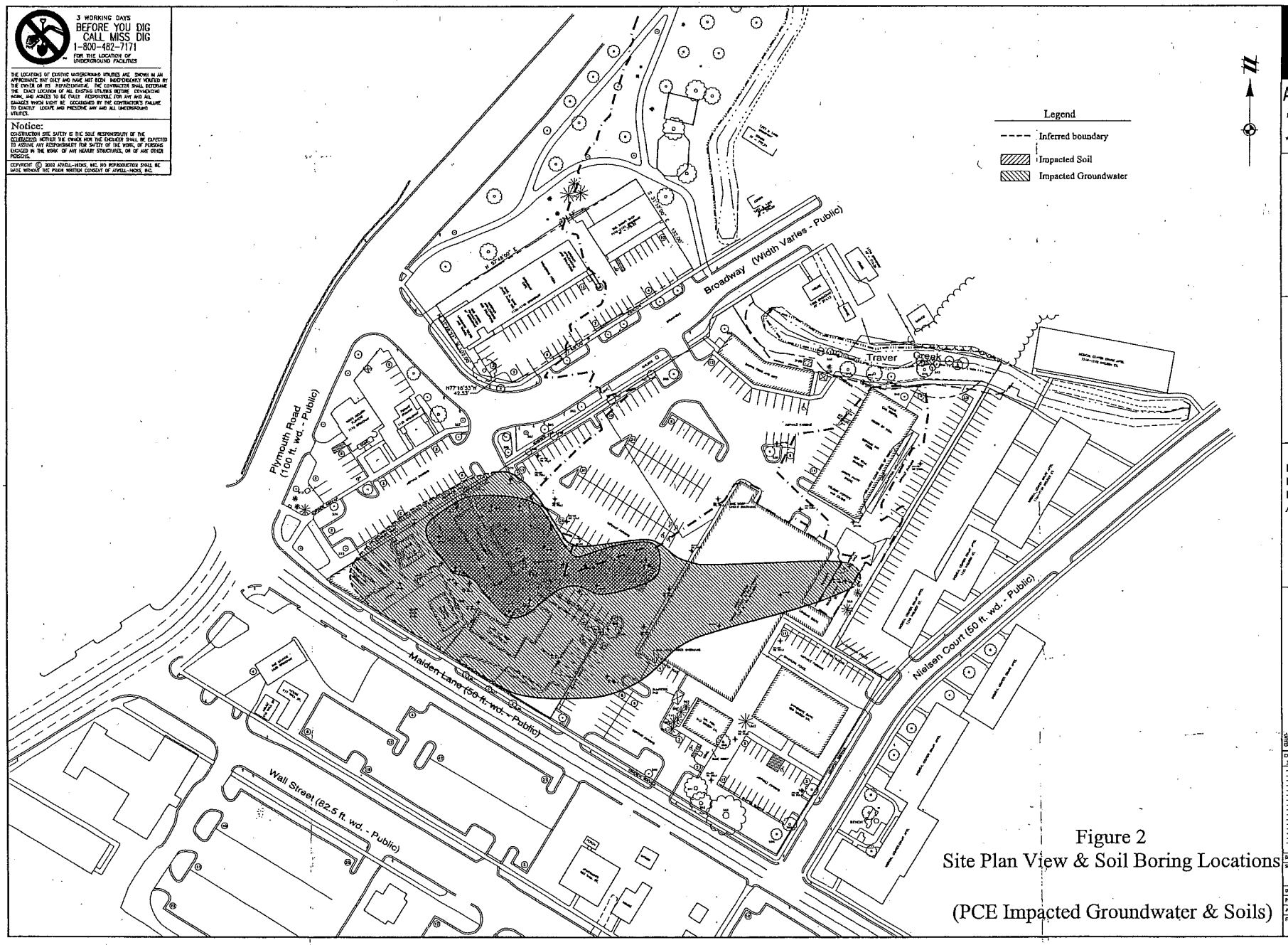


Figure 2
Site Plan View & Soil Boring Locations

(PCE Impacted Groundwater & Soils)

Atwell-Hicks, Inc.
Civil Engineering • Surveying
Planning • Environmental Services
Ann Arbor, MI (734) 994-4000
Brighton, MI (810) 229-6050
Washington Twp., MI (586) 786-8430
Naperville, IL (630) 777-0800

SmithGroup
SmithGroup Incorporated
110 Miller Avenue
Ann Arbor, Michigan 48104
t: 734.769.9444
f: 734.769.0939
www.smithgroup.com

SmithGroup JJR
SmithGroup JJR Incorporated
110 Miller Avenue
Ann Arbor, Michigan 48104
t: 734.662.4457
f: 734.662.7520
www.smithgroup.com

BROWNING
DAY MULLINS
DIERDORF
ARCHITECTS
334 North Senate Avenue
Indianapolis, IN 46204
Phone 317.635.5030
Fax 317.634.5409

Lower Town Development Group, LLC
Broadway Village at Lower Town
Section 11, Town 2 South, Range 9 East,
City of Ann Arbor, Washtenaw County, Michigan

Soil Boring Locations
PCE Impacted Groundwater & Soils

CAD FILE
300056/DWG/CD-SOILS/300056-SOIL BORINGS

SUBMISSION / REVISIONS

DATE December 3, 2002
SCALE 0 25 50
1" = 50 Feet
DR. LJGSS CH. BS
P.M. G. McKeegan
JOB 300056
FILE NO.

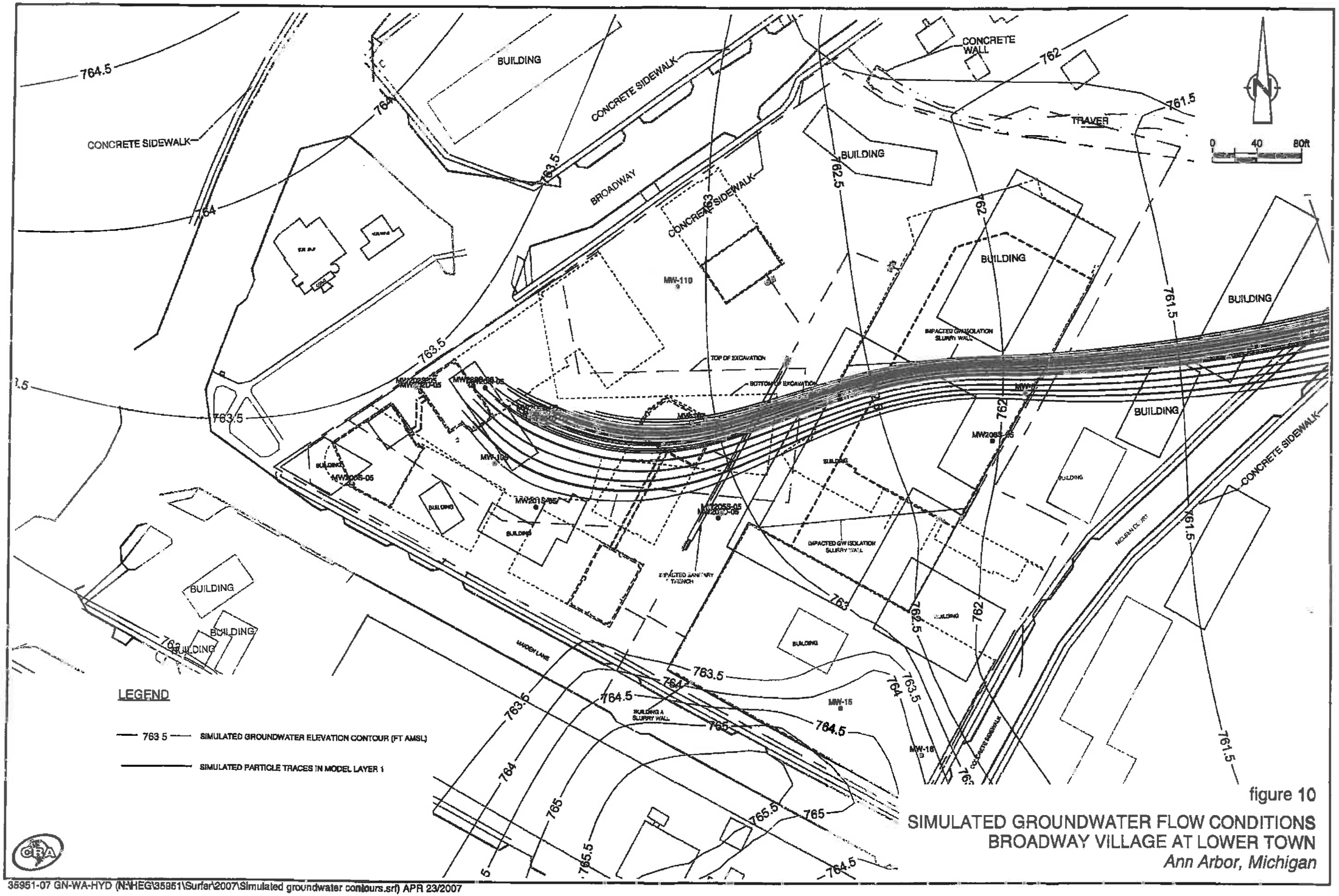


figure 10

SIMULATED GROUNDWATER FLOW CONDITIONS
BROADWAY VILLAGE AT LOWER TOWN
*Ann Arbor, Michigan*

35951-07 GN-WA-HYD (N:\HEG\35951\Surfer\2007\Simulated groundwater contours.srf) APR 23/2007

# Appendix C

PM ENVIRONMENTAL Environmental & Engineering Services

# Well Log .

**Project No.:** 01-5623-0-007
**Well No.:** SB/TMW-1
**Project Name:** Maiden Lane
**Date Drilled:** 9/03/2015
**Facility ID#:**
**Drill Rig:** 6712 DT
**Logged By:** KL
**Sampling Method:** 2 1/8" MC

## SUBSURFACE PROFILE

Ground Surface

**ASPHALT**

**GW- (Loose) GRAVELLY SAND (moist)**
Brown, medium coarse

**CL- (Medium Stiff) SANDY CLAY (moist)**
Brown

**SP- (Loose) SAND (saturated)**
Brown, medium fine

## SAMPLE

| Sample # Depth | Blow Counts | PID (ppm) |
|---|---|---|
| | - | 0.0 |
| | - | 0.0 |
| SS-1 2.0 - 3.0' | - | 0.0 |
| | - | 0.0 |
| | - | 0.0 |
| | - | 0.0 |
| | - | 0.0 |
| | - | 0.0 |
| | - | 0.0 |
| | - | 0.0 |
| | - | 0.0 |
| | - | 0.0 |
| | - | 0.0 |
| | - | 0.0 |
| | - | 0.0 |
| | - | 0.0 |
| | - | 0.0 |
| | - | 0.0 |
| | - | 0.0 |
| | - | 0.0 |

## Groundwater Well Completion Details

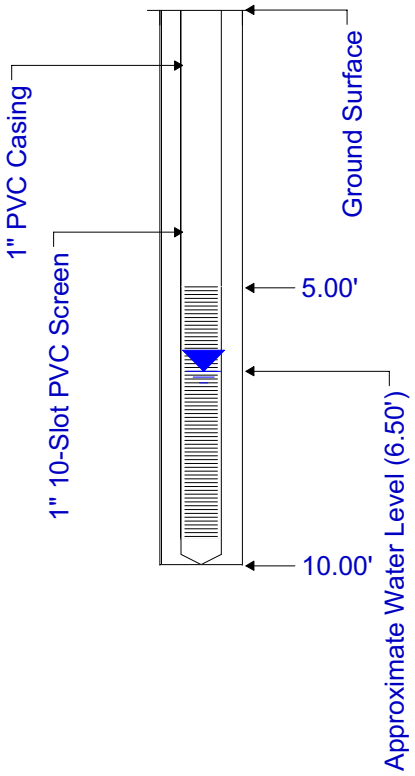


**Completion Notes:** EOB @ 20' bgs. Hole filled with soil cuttings and bentonite.

1. The indicated stratification lines are approximate in situ. The transitions between materials may be gradual.
2. Boring backfilled with natural soils unless otherwise noted

# Well Log .

**Project No.:** 01-5623-0-007
**Well No.:** SB/TMW-2/SG-1
**Project Name:** Maiden Lane
**Date Drilled:** 9/03/2015
**Facility ID#:**
**Drill Rig:** 6712 DT
**Logged By:** KL
**Sampling Method:** 2 1/8" MC

| SUBSURFACE PROFILE | | | SAMPLE | | | |
|---|---|---|---|---|---|---|
| Depth (ft.) | Boring Profile | Description and Comments | Sample # Depth | Blow Counts | PID (ppm) | Groundwater Well Completion Details |
| | | Ground Surface | | | | |
| 0 | | ***ASPHALT*** | | - | 0.0 | |
| | | ***SC- (Medium Dense) CLAYEY SAND (moist)*** Brown/Gray, fine | | - | 0.0 | |
| 2 | | ***GW- (Loose) GRAVELLY SAND (moist)*** Brown, medium coarse | | - | 0.0 | |
| | | | | - | 0.0 | |
| 4 | | | | - | 0.0 | |
| | | | | - | 0.0 | |
| 6 | | | | - | 0.0 | |
| | | | | - | 0.0 | |
| 8 | | | | - | 0.0 | |
| | | ***GW- (Loose) GRAVELLY SAND (saturated)*** Brown, medium coarse | | - | 0.0 | |
| 10 | | | | - | 0.0 | |
| | | | | - | 0.0 | |
| 12 | | | | - | 0.0 | |
| | | ***SP- (Loose) SAND (moist)*** Brown, medium fine | | - | 0.0 | |
| 14 | | | | - | 0.0 | |
| 16 | | | | | | |

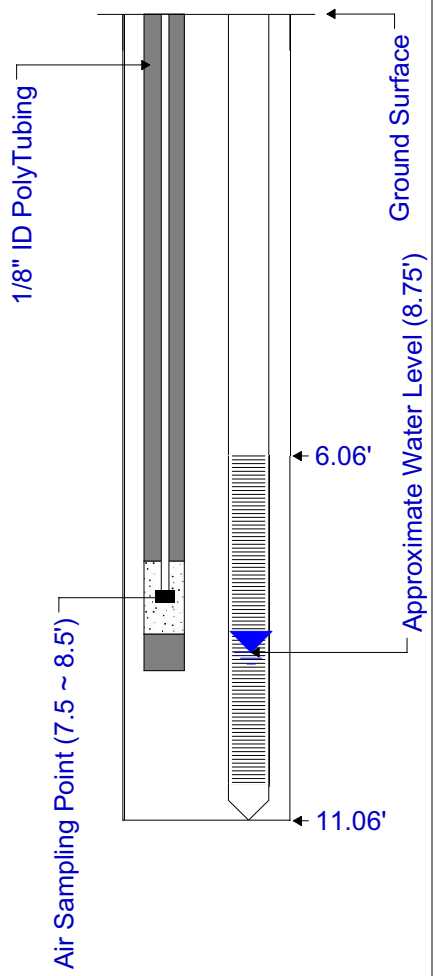


***Completion Notes:*** EOB @ 15' bgs. Hole filled with soil cuttings and bentonite.

1. The indicated stratification lines are approximate in situ. The transitions between materials may be gradual.
2. Boring backfilled with natural soils unless otherwise noted

# Well Log .

**Project No.:** 01-5623-0-007
**Well No.:** SB/TMW-3/SG-2
**Project Name:** Maiden Lane
**Date Drilled:** 9/03/2015
**Facility ID#:**
**Drill Rig:** 6712 DT
**Logged By:** KL
**Sampling Method:** 2 1/8" MC

| SUBSURFACE PROFILE | | | SAMPLE | | | |
|---|---|---|---|---|---|---|
| Depth (ft.) | Boring Profile | Description and Comments | Sample # Depth | Blow Counts | PID (ppm) | Groundwater Well Completion Details |
| | | Ground Surface | | | | |
| 0 | | ***ASPHALT*** | | - | 0.0 | |
| | | ***CL- (Medium Stiff) SANDY CLAY (moist)*** Gray/Brown, with gravel | SS-1 1.0 - 2.0' | - | 0.0 | |
| 2 | | | | - | 0.0 | |
| | | | | - | 0.0 | |
| 4 | | | | - | 0.0 | |
| | | | | - | 0.0 | |
| 6 | | | | - | 0.0 | |
| | | ***GW- (Loose) GRAVELLY SAND (moist)*** Brown, medium coarse | | - | 0.0 | |
| 8 | | | | - | 0.0 | |
| | | ***GW- (Loose) GRAVELLY SAND (saturated)*** Brown, medium coarse | | - | 0.0 | |
| 10 | | | | - | 0.0 | |
| | | | | - | 0.0 | |
| 12 | | | | - | 0.0 | |
| | | | | - | 0.0 | |
| 14 | | | | - | 0.0 | |
| 16 | | | | | | |

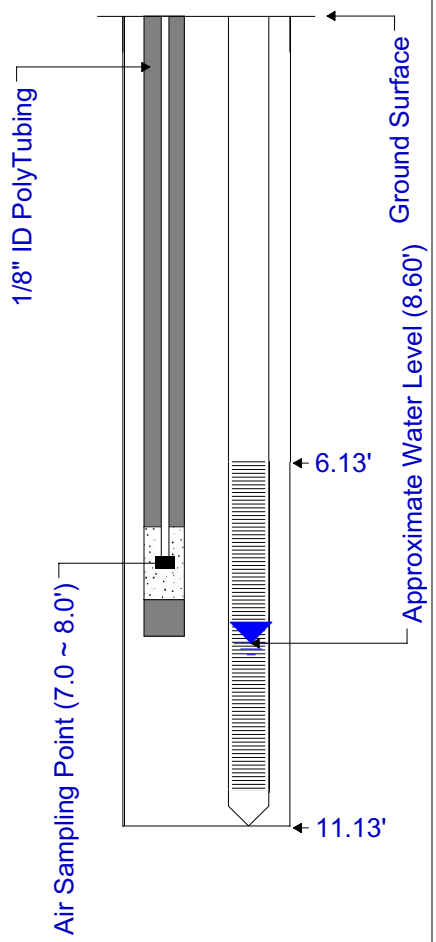


***Completion Notes:*** EOB @ 15' bgs. Hole filled with soil cuttings and bentonite.

1. The indicated stratification lines are approximate in situ. The transitions between materials may be gradual.
2. Boring backfilled with natural soils unless otherwise noted

# Well Log .

**Project No.:** 01-5623-0-007
**Well No.:** SB/TMW-4
**Project Name:** Maiden Lane
**Date Drilled:** 9/03/2015
**Facility ID#:**
**Drill Rig:** 6712 DT
**Logged By:** KL
**Sampling Method:** 2 1/8" MC

| SUBSURFACE PROFILE | | | SAMPLE | | | |
|---|---|---|---|---|---|---|
| Depth (ft.) | Boring Profile | Description and Comments | Sample # Depth | Blow Counts | PID (ppm) | Groundwater Well Completion Details |
| | | Ground Surface | | | | |
| 0 | | ***GRASS/TOP SOIL*** | | - | 0.0 | |
| | | ***SC- (Medium Stiff) SANDY CLAY (moist)*** Gray/Brown | | - | 0.0 | |
| 2 | | | | - | 0.0 | |
| | | | | - | 0.0 | |
| 4 | | | | - | 0.0 | |
| | | | | - | 0.0 | |
| 6 | | ***GW- (Loose) GRAVELLY SAND (moist)*** Brown, medium coarse | SS-1 6.5 - 7.5' | - | 0.0 | |
| | | ***GW- (Loose) GRAVELLY SAND (saturated)*** Brown, medium coarse | | - | 0.0 | |
| 8 | | | | - | 0.0 | |
| | | | | - | 0.0 | |
| 10 | | | | - | 0.0 | |
| | | | | - | 0.0 | |
| 12 | | | | - | 0.0 | |
| | | | | - | 0.0 | |
| 14 | | | | - | 0.0 | |
| 16 | | | | | | |

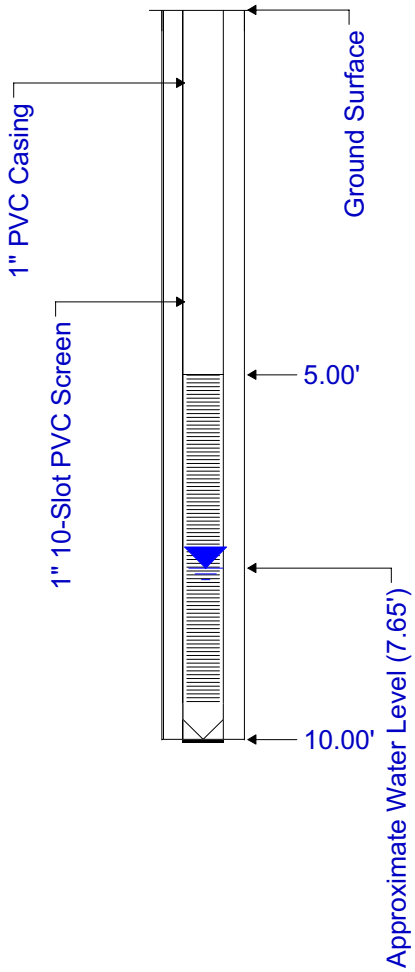


***Completion Notes:*** EOB @ 15' bgs. Hole filled with soil cuttings and bentonite.

1. The indicated stratification lines are approximate in situ. The transitions between materials may be gradual.
2. Boring backfilled with natural soils unless otherwise noted

# Well Log .

**Project No.:** 01-5623-0-007
**Well No.:** SB/TMW-5/SG-3
**Project Name:** Maiden Lane
**Date Drilled:** 9/03/2015
**Facility ID#:**
**Drill Rig:** 6712 DT
**Logged By:** KL
**Sampling Method:** 2 1/8" MC

| SUBSURFACE PROFILE | | | SAMPLE | | | |
|---|---|---|---|---|---|---|
| Depth (ft.) | Boring Profile | Description and Comments | Sample # Depth | Blow Counts | PID (ppm) | Groundwater Well Completion Details |
| | | Ground Surface | | | | |
| 0 | | ***GRASS/TOP SOIL*** | | - | 0.0 | |
| | | ***ML- (Dense) SILTY SAND (moist)*** Gray, very fine | | - | 0.0 | |
| 2 | | | | - | 0.0 | |
| | | | | - | 0.0 | |
| 4 | | ***CL- (Stiff) SILTY CLAY (moist)*** Brown | | - | 0.0 | |
| | | | | - | 0.0 | |
| 6 | | | | - | 0.0 | |
| | | | | - | 0.0 | |
| 8 | | | | - | 0.0 | |
| | | | | - | 0.0 | |
| 10 | | ***SP- (Loose) SAND (saturated)*** Brown, medium fine | | - | 0.0 | |
| | | | | - | 0.0 | |
| 12 | | | | - | 0.0 | |
| | | | | - | 0.0 | |
| 14 | | | | - | 0.0 | |
| 16 | | | | | | |

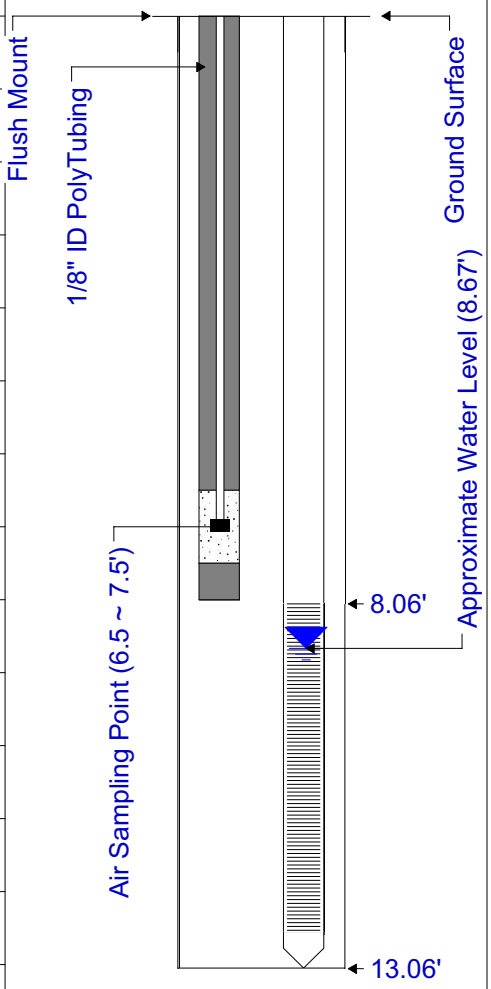


***Completion Notes:*** EOB @ 15' bgs. Hole filled with soil cuttings and bentonite.

1. The indicated stratification lines are approximate in situ. The transitions between materials may be gradual.
2. Boring backfilled with natural soils unless otherwise noted

# Well Log .

**Project No.:** 01-5623-0-007
**Well No.:** SB/TMW-6
**Project Name:** Maiden Lane
**Date Drilled:** 9/03/2015
**Facility ID#:**
**Drill Rig:** 6712 DT
**Logged By:** KL
**Sampling Method:** 2 1/8" MC

| SUBSURFACE PROFILE | | | SAMPLE | | | |
|---|---|---|---|---|---|---|
| Depth (ft.) | Boring Profile | Description and Comments | Sample # Depth | Blow Counts | PID (ppm) | Groundwater Well Completion Details |
| | | Ground Surface | | | | |
| 0 | | ***GRASS/TOP SOIL*** | | - | 0.0 | |
| | | ***ML- (Medium Dense) SILTY SAND (moist)*** Gray/Brown, very fine | | - | 0.0 | |
| 2 | | | | - | 0.0 | |
| | | | | - | 0.0 | |
| 4 | | | | - | 0.0 | |
| | | ***CL- (Medium Stiff) SANDY CLAY (moist)*** Brown, trace gravel | | - | 0.0 | |
| 6 | | | | - | 0.0 | |
| | | | | - | 0.0 | |
| 8 | | | SS-1 8.5 - 9.5' | - | 0.0 | |
| | | ***SP- (Loose) SAND (saturated)*** Gray/Brown, medium fine | | - | 0.0 | |
| 10 | | | | - | 0.0 | |
| | | | | - | 0.0 | |
| 12 | | | | - | 0.0 | |
| | | | | - | 0.0 | |
| 14 | | | | - | 0.0 | |
| 16 | | | | | | |

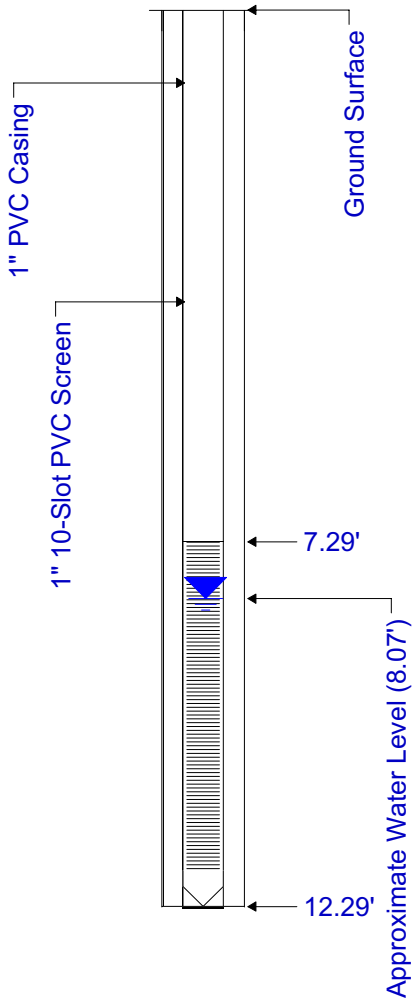


**Completion Notes:** EOB @ 15' bgs. Hole filled with soil cuttings and bentonite.

1. The indicated stratification lines are approximate in situ. The transitions between materials may be gradual.
2. Boring backfilled with natural soils unless otherwise noted

# Boring Log .

**Project No.:** 01-5623-0-007
**Boring No.:** SB-7/SG-4
**Project Name:** Maiden Lane
**Date Drilled:** 9/03/2015
**Facility ID#:**
**Drill Rig:** 6712 DT
**Logged By:** KL
**Sampling Method:** 2 1/8" MC

PM ENVIRONMENTAL

| SUBSURFACE PROFILE | | | SAMPLE | | | |
|---|---|---|---|---|---|---|
| Depth (ft.) | Boring Profile | Description and Comments | Sample # Depth | Blow Counts | PID (ppm) | No Well Installed |
| | | Ground Surface | | | | |
| 0 | | ***ASPHALT*** | | - | 0.0 | |
| | | ***SC- (Medium Dense) CLAYEY SAND (moist)*** Brown, fine, trace gravel | | - | 0.0 | |
| 2 | | | | - | 0.0 | |
| | | | | - | 0.0 | |
| 4 | | | | - | 0.0 | |
| | | | | - | 0.0 | |
| 6 | | | | - | 0.0 | |
| | | | | - | 0.0 | |
| 8 | | ***GW- (Medium Dense) GRAVELLY SAND (moist)*** Brown | SS-1 8.0 - 9.0' | - | 0.0 | |
| | | ***CL- (Stiff) CLAY (moist)*** Brown, trace gravel | | - | 0.0 | |
| 10 | | | | - | 0.0 | |
| | | | | - | 0.0 | |
| 12 | | ***CL- (Stiff) CLAY (moist)*** Gray, trace gravel | | - | 0.0 | |
| | | | | - | 0.0 | |
| 14 | | | | - | 0.0 | |
| | | | | - | 0.0 | |
| 16 | | | | - | 0.0 | |
| | | | | - | 0.0 | |
| 18 | | ***ML- (Dense) SILTY SAND (very moist)*** Gray, fine | | - | 0.0 | |
| | | | | - | 0.0 | |
| 20 | | | | | | |

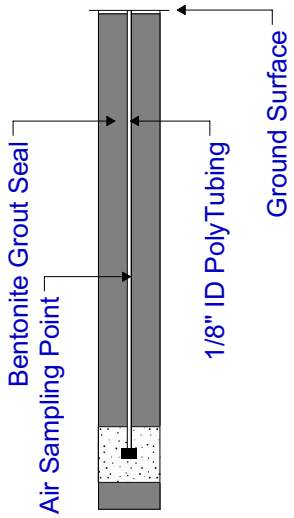


***Completion Notes:*** EOB @ 20' bgs. Hole filled with soil cuttings and bentonite.

1. The indicated stratification lines are approximate in situ. The transitions between materials may be gradual.
2. Boring backfilled with natural soils unless otherwise noted.

# Well Log .

**Project No.:** 01-5623-0-007
**Well No.:** SB/TMW-8
**Project Name:** Maiden Lane
**Date Drilled:** 9/03/2015
**Facility ID#:**
**Drill Rig:** 6712 DT
**Logged By:** KL
**Sampling Method:** 2 1/8" MC

| SUBSURFACE PROFILE | | | SAMPLE | | | |
|---|---|---|---|---|---|---|
| Depth (ft.) | Boring Profile | Description and Comments | Sample # Depth | Blow Counts | PID (ppm) | Groundwater Well Completion Details |
| | | Ground Surface | | | | |
| 0 | | ***ASPHALT*** | | - | 0.0 | |
| | | ***CL- (Medium Dense) CLAYEY SAND (moist)*** Brown, fine, trace gravel | | - | 0.0 | |
| 2 | | | | - | 0.0 | |
| | | | | - | 0.0 | |
| 4 | | ***CL- (Stiff) CLAY (moist)*** Brown, trace sand and gravel | | - | 0.0 | |
| | | | | - | 0.0 | |
| 6 | | | | - | 0.0 | |
| | | | | - | 0.0 | |
| 8 | | ***SC- (Medium Dense) CLAYEY SAND (moist)*** Brown, fine, with gravel | | - | 0.0 | |
| | | | | - | 0.0 | |
| 10 | | | | - | 0.0 | |
| | | ***GW- (Loose) GRAVELLY SAND (saturated)*** Brown, medium coarse | | - | 0.0 | |
| 12 | | | | - | 0.0 | |
| | | | | - | 0.0 | |
| 14 | | | | - | 0.0 | |
| | | | | - | 0.0 | |
| 16 | | | | - | 0.0 | |
| | | | | - | 0.0 | |
| 18 | | | | - | 0.0 | |
| | | | | - | 0.0 | |
| 20 | | | | | | |

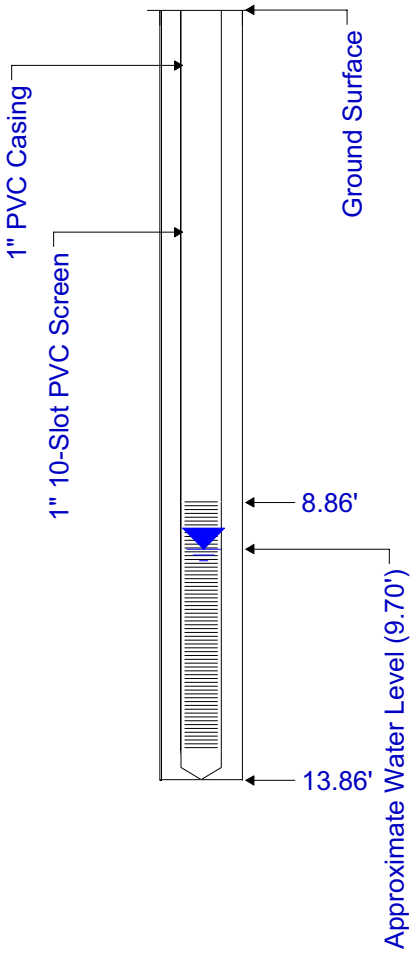


***Completion Notes:*** EOB @ 20' bgs. Hole filled with soil cuttings and bentonite.

1. The indicated stratification lines are approximate in situ. The transitions between materials may be gradual.
2. Boring backfilled with natural soils unless otherwise noted

# Well Log .

**Project No.:** 01-5623-0-007
**Well No.:** SB/TMW-9
**Project Name:** Maiden Lane
**Date Drilled:** 10/14/2015
**Facility ID#:**
**Drill Rig:** 6712 DT
**Logged By:** KL
**Sampling Method:** 2 1/8" MC

| SUBSURFACE PROFILE | | | SAMPLE | | | |
|---|---|---|---|---|---|---|
| Depth (ft.) | Boring Profile | Description and Comments | Sample # Depth | Blow Counts | PID (ppm) | Groundwater Well Completion Details |
| | | Ground Surface | | | | |
| 0 | | ***GRASS/TOP SOIL*** | | - | 0.0 | |
| | | ***SC- (Medium Dense) CLAYEY SAND (moist)*** Gray/Brown, fine | | - | 0.0 | |
| 2 | | | | - | 0.0 | |
| | | ***CL- (Medium Stiff) SANDY CLAY (moist)*** Brown, with gravel | | - | 0.0 | |
| 4 | | | | - | 0.0 | |
| | | | | - | 0.0 | |
| 6 | | ***GW- (Loose) GRAVELLY SAND (moist)*** Brown, medium coarse | | - | 0.0 | |
| | | | | - | 0.0 | |
| 8 | | | | - | 0.0 | |
| | | ***GW- (Loose) GRAVELLY SAND (saturated)*** Brown, medium coarse | | - | 0.0 | |
| 10 | | | | - | 0.0 | |
| | | | | - | 0.0 | |
| 12 | | | | - | 0.0 | |
| | | ***CL- (Stiff) CLAY (moist)*** Gray, trace gravel | | - | 0.0 | |
| 14 | | | | - | 0.0 | |
| | | | | - | 0.0 | |
| 16 | | | | - | 0.0 | |
| | | | | - | 0.0 | |
| 18 | | ***CL- (Medium Stiff) SILTY CLAY (moist)*** Gray | | - | 0.0 | |
| | | | | - | 0.0 | |
| 20 | | | | | | |

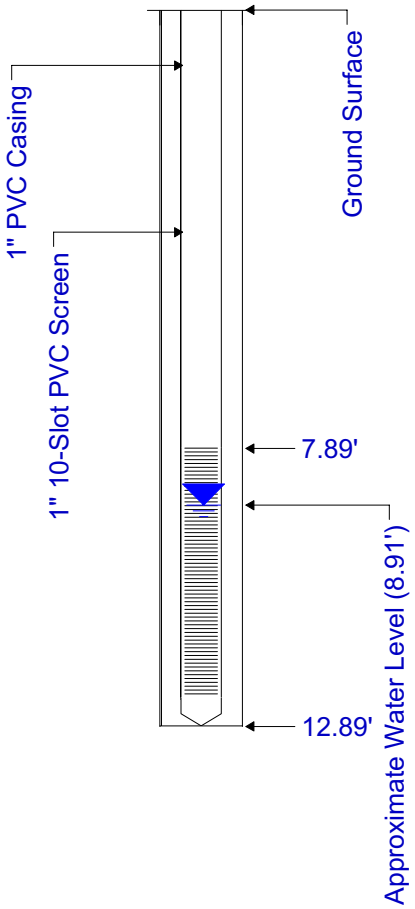


**Completion Notes:** EOB @ 20' bgs. Hole filled with soil cuttings and bentonite.

1. The indicated stratification lines are approximate in situ. The transitions between materials may be gradual.
2. Boring backfilled with natural soils unless otherwise noted

# Well Log .

**Project No.:** 01-5623-0-007
**Well No.:** SB/TMW-10
**Project Name:** Maiden Lane
**Date Drilled:** 10/14/2015
**Facility ID#:**
**Drill Rig:** 6712 DT
**Logged By:** KL
**Sampling Method:** 2 1/8" MC

| SUBSURFACE PROFILE | | | SAMPLE | | | |
|---|---|---|---|---|---|---|
| Depth (ft.) | Boring Profile | Description and Comments | Sample # Depth | Blow Counts | PID (ppm) | Groundwater Well Completion Details |
| | | Ground Surface | | | | |
| 0 | | ***GRASS/TOP SOIL*** | | - | 0.0 | |
| | | ***SC- (Medium Dense) CLAYEY SAND (moist)*** Gray/Brown, fine | | - | 0.0 | |
| 2 | | | | - | 0.0 | |
| | | | | - | 0.0 | |
| 4 | | ***CL- (Medium Soft) SANDY CLAY (moist)*** Gray | | - | 0.0 | |
| | | | | - | 0.0 | |
| 6 | | ***GW- (Loose) GRAVELLY SAND (moist)*** Brown, medium coarse | | - | 0.0 | |
| | | | | - | 0.0 | |
| 8 | | ***SP- (Loose) SAND (saturated)*** Brown, fine | | - | 0.0 | |
| | | | | - | 0.0 | |
| 10 | | | | - | 0.0 | |
| | | | | - | 0.0 | |
| 12 | | | | - | 0.0 | |
| | | ***SP- (Loose) SAND (saturated)*** Brown, medium fine, with gravel | | - | 0.0 | |
| 14 | | | | - | 0.0 | |
| | | | | - | 0.0 | |
| 16 | | | | - | 0.0 | |
| | | | | - | 0.0 | |
| 18 | | | | - | 0.0 | |
| | | | | - | 0.0 | |
| 20 | | | | | | |

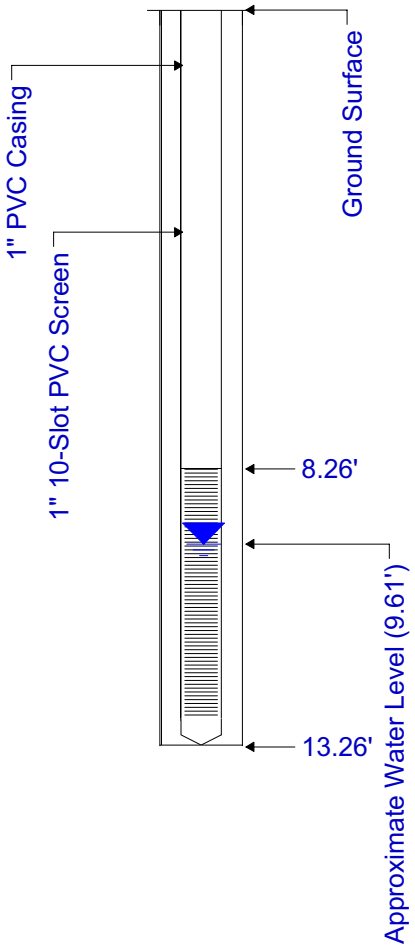


***Completion Notes:*** EOB @ 20' bgs. Hole filled with soil cuttings and bentonite.

1. The indicated stratification lines are approximate in situ. The transitions between materials may be gradual.
2. Boring backfilled with natural soils unless otherwise noted

# Well Log .

**Project No.:** 01-5623-0-007
**Well No.:** SB/TMW-11
**Project Name:** Maiden Lane
**Date Drilled:** 10/14/2015
**Facility ID#:**
**Drill Rig:** 6712 DT
**Logged By:** KL
**Sampling Method:** 2 1/8" MC

| SUBSURFACE PROFILE | | | SAMPLE | | | |
|---|---|---|---|---|---|---|
| Depth (ft.) | Boring Profile | Description and Comments | Sample # Depth | Blow Counts | PID (ppm) | Groundwater Well Completion Details |
| | | Ground Surface | | | | |
| 0 | | ***GRASS/TOP SOIL*** | | - | 0.0 | |
| | | ***SC- (Medium Dense) CLAYEY SAND (moist)*** Brown, fine, with gravel | | - | 0.0 | |
| 2 | | | | - | 0.0 | |
| | | | | - | 0.0 | |
| 4 | | ***GW- (Loose) GRAVELLY SAND (moist)*** Brown, medium coarse | | - | 0.0 | |
| | | | | - | 0.0 | |
| 6 | | ***CL- (Stiff) SILTY CLAY (moist)*** Gray/Brown | | - | 0.0 | |
| | | | | - | 0.0 | |
| 8 | | | | - | 0.0 | |
| | | | | - | 0.0 | |
| 10 | | | | - | 0.0 | |
| | | | | - | 0.0 | |
| 12 | | | | - | 0.0 | |
| | | | | - | 0.0 | |
| 14 | | ***GW- (Loose) GRAVELLY SAND (saturated)*** Brown, medium coarse | | - | 0.0 | |
| | | | | - | 0.0 | |
| 16 | | | | - | 0.0 | |
| | | | | - | 0.0 | |
| 18 | | | | - | 0.0 | |
| | | | | - | 0.0 | |
| 20 | | | | | | |

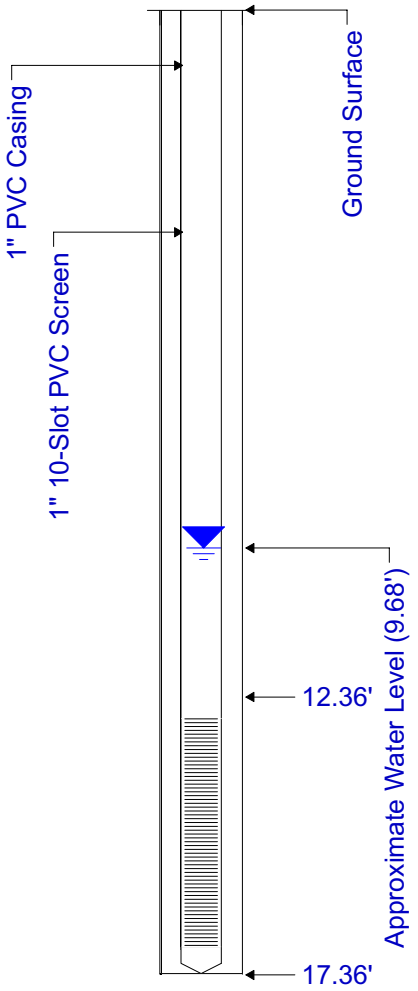


***Completion Notes:*** EOB @ 20' bgs. Hole filled with soil cuttings and bentonite.

1. The indicated stratification lines are approximate in situ. The transitions between materials may be gradual.
2. Boring backfilled with natural soils unless otherwise noted

# Well Log .

**Project No.:** 01-5623-0-007
**Well No.:** SB/TMW-12
**Project Name:** Maiden Lane
**Date Drilled:** 10/14/2015
**Facility ID#:**
**Drill Rig:** 6712 DT
**Logged By:** KL
**Sampling Method:** 2 1/8" MC

| SUBSURFACE PROFILE | | | SAMPLE | | | |
|---|---|---|---|---|---|---|
| Depth (ft.) | Boring Profile | Description and Comments | Sample # Depth | Blow Counts | PID (ppm) | Groundwater Well Completion Details |
| | | Ground Surface | | | | |
| 0 | | ***GRASS/TOP SOIL*** | | - | 0.0 | |
| | | ***SC- (Medium Dense) CLAYEY SAND (moist)*** Brown, fine, with gravel | | - | 0.0 | |
| 2 | | | | - | 0.0 | |
| | | ***CL- (Medium Soft) SANDY CLAY (moist)*** Dark Brown | | - | 0.0 | |
| 4 | | | | - | 0.0 | |
| | | | | - | 0.0 | |
| 6 | | ***GW- (Loose) GRAVELLY SAND (moist)*** Gray/Brown, medium coarse | | - | 0.0 | |
| | | | | - | 0.0 | |
| 8 | | | | - | 0.0 | |
| | | ***GW- (Loose) GRAVELLY SAND (saturated)*** Brown, medium coarse | | - | 0.0 | |
| 10 | | | | - | 0.0 | |
| | | | | - | 0.0 | |
| 12 | | | | - | 0.0 | |
| | | | | - | 0.0 | |
| 14 | | | | - | 0.0 | |
| | | | | - | 0.0 | |
| 16 | | | | - | 0.0 | |
| | | | | - | 0.0 | |
| 18 | | | | - | 0.0 | |
| | | | | - | 0.0 | |
| 20 | | | | | | |

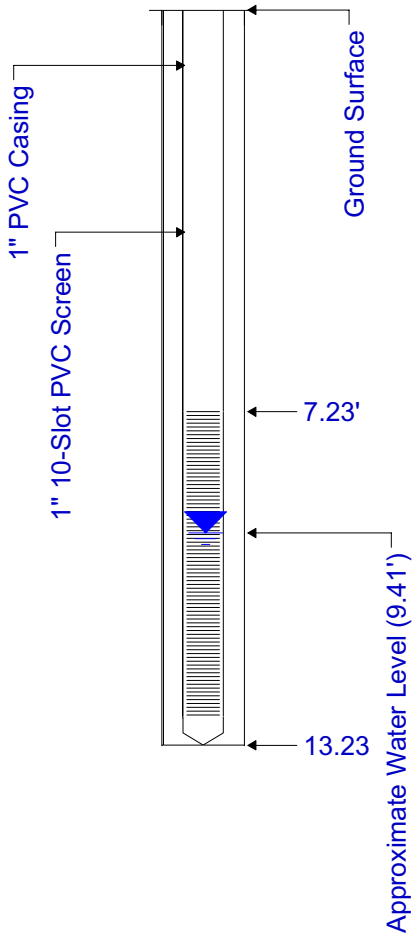


***Completion Notes:*** EOB @ 20' bgs. Hole filled with soil cuttings and bentonite.

1. The indicated stratification lines are approximate in situ. The transitions between materials may be gradual.
2. Boring backfilled with natural soils unless otherwise noted

# Well Log .

**Project No.:** 01-5623-0-007
**Well No.:** SB/TMW-13
**Project Name:** Maiden Lane
**Date Drilled:** 10/14/2015
**Facility ID#:**
**Drill Rig:** 6712 DT
**Logged By:** KL
**Sampling Method:** 2 1/8" MC

| SUBSURFACE PROFILE | | | SAMPLE | | | |
|---|---|---|---|---|---|---|
| Depth (ft.) | Boring Profile | Description and Comments | Sample # Depth | Blow Counts | PID (ppm) | Groundwater Well Completion Details |
| | | Ground Surface | | | | |
| 0 | | ***GRASS/TOP SOIL*** | | - | 0.0 | |
| | | ***SC- (Medium Dense) CLAYEY SAND (moist)*** Brown, fine, with gravel | | - | 0.0 | |
| 2 | | | | - | 0.0 | |
| | | ***CL- (Medium Soft) SANDY CLAY (moist)*** Brown, trace gravel | | - | 0.0 | |
| 4 | | | | - | 0.0 | |
| 6 | | | | - | 0.0 | |
| | | | | - | 0.0 | |
| 8 | | | | - | 0.0 | |
| | | ***GW- (Loose) GRAVELLY SAND (saturated)*** Brown, medium coarse | | - | 0.0 | |
| 10 | | | | - | 0.0 | |
| | | | | - | 0.0 | |
| 12 | | | | - | 0.0 | |
| | | | | - | 0.0 | |
| 14 | | | | - | 0.0 | |
| | | | | - | 0.0 | |
| 16 | | | | - | 0.0 | |
| | | | | - | 0.0 | |
| 18 | | | | - | 0.0 | |
| 20 | | | | - | 0.0 | |

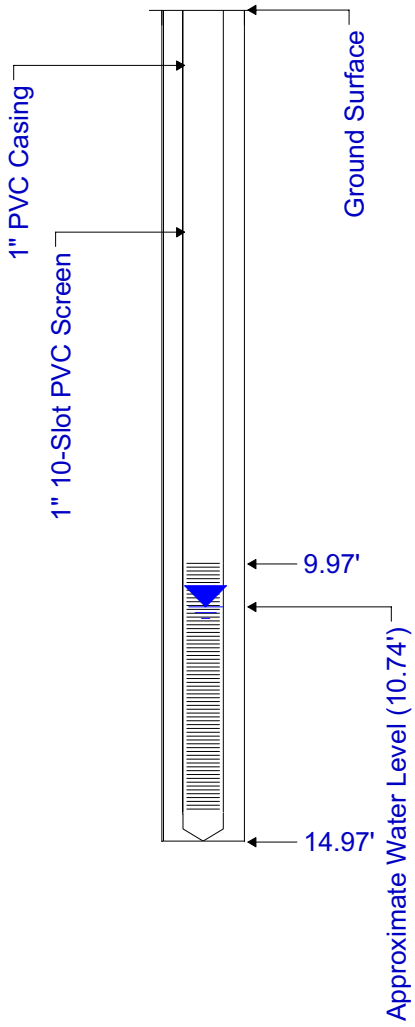


***Completion Notes:*** EOB @ 20' bgs. Hole filled with soil cuttings and bentonite.

1. The indicated stratification lines are approximate in situ. The transitions between materials may be gradual.
2. Boring backfilled with natural soils unless otherwise noted

# Well Log .

**Project No.:** 01-5623-0-007
**Well No.:** SB/TMW-14
**Project Name:** Maiden Lane
**Date Drilled:** 10/14/2015
**Facility ID#:**
**Drill Rig:** 6712 DT
**Logged By:** KL
**Sampling Method:** 2 1/8" MC

| SUBSURFACE PROFILE | | | SAMPLE | | | |
|---|---|---|---|---|---|---|
| Depth (ft.) | Boring Profile | Description and Comments | Sample # Depth | Blow Counts | PID (ppm) | Groundwater Well Completion Details |
| | | Ground Surface | | | | |
| 0 | | ***ASPHALT*** | | - | 0.0 | |
| | | ***SC- (Medium Dense) CLAYEY SAND (moist)*** Gray/Brown, fine | | - | 0.0 | |
| 2 | | | | - | 0.0 | |
| | | | | - | 0.0 | |
| 4 | | ***CL- (Medium Stiff) SANDY CLAY (moist)*** Gray | | - | 0.0 | |
| | | | | - | 0.0 | |
| 6 | | ***GW- (Loose) GRAVELLY SAND (moist)*** Brown, medium coarse | | - | 0.0 | |
| | | | | - | 0.0 | |
| 8 | | | | - | 0.0 | |
| | | | | - | 0.0 | |
| 10 | | ***GW- (Loose) GRAVELLY SAND (saturated)*** Brown, medium coarse | | - | 0.0 | |
| | | | | - | 0.0 | |
| 12 | | | | - | 0.0 | |
| | | | | - | 0.0 | |
| 14 | | | | - | 0.0 | |
| | | | | - | 0.0 | |
| 16 | | | | - | 0.0 | |
| | | | | - | 0.0 | |
| 18 | | | | - | 0.0 | |
| | | | | - | 0.0 | |
| 20 | | | | | | |

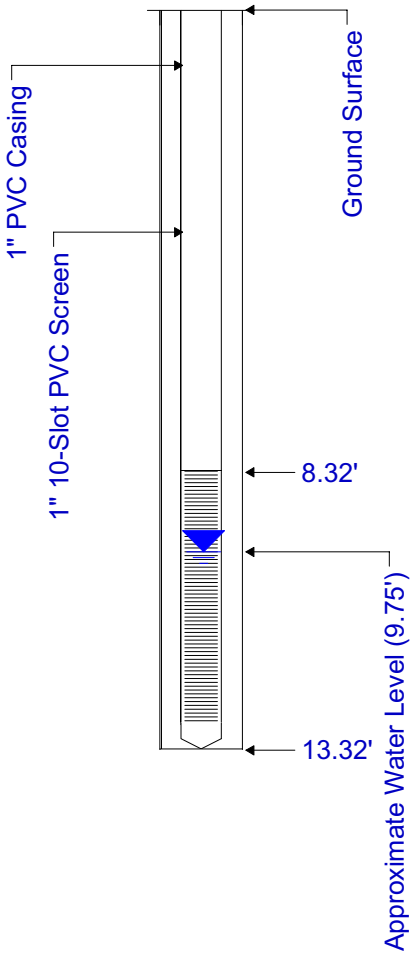


**Completion Notes:** EOB @ 20' bgs. Hole filled with soil cuttings and bentonite.

1. The indicated stratification lines are approximate in situ. The transitions between materials may be gradual.
2. Boring backfilled with natural soils unless otherwise noted